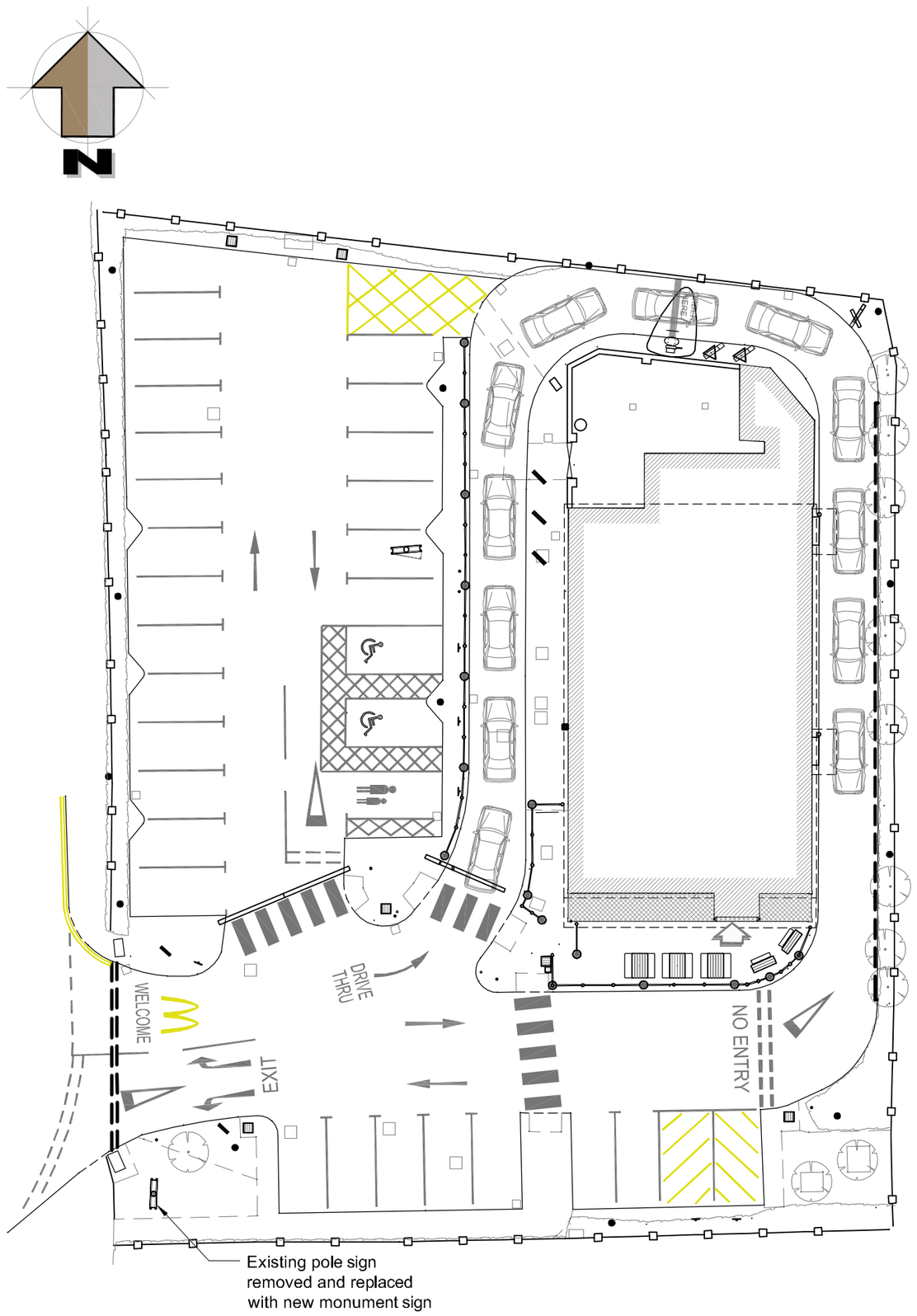

Site Plan
Scale 1:250

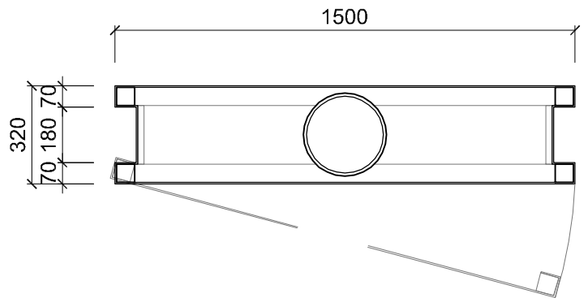

Monument Sign Plan
Scale 1:20

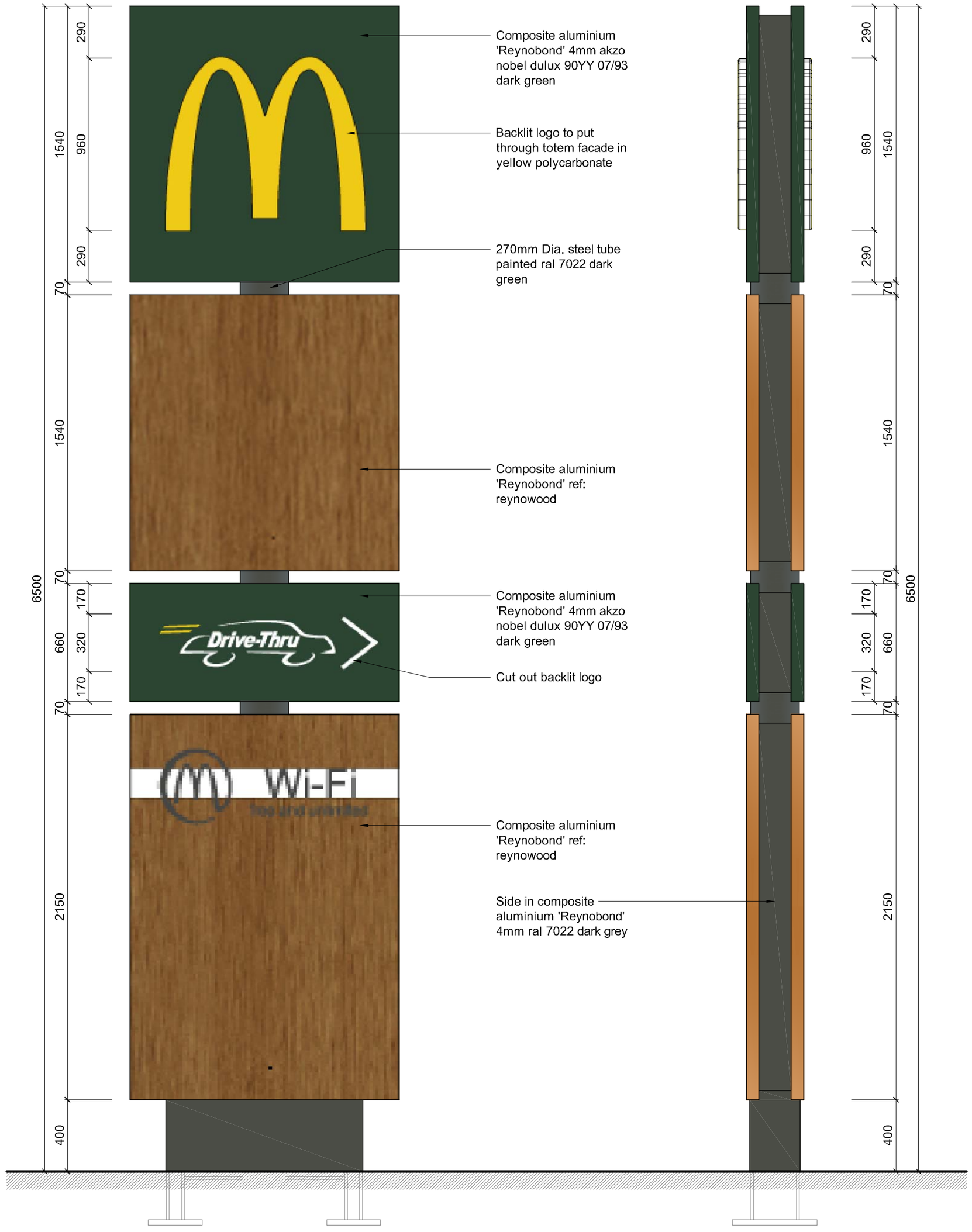

Monument Sign Front & Side Elevations
Scale 1:20

REV.	DATE	DRAWING REVISIONS	BY	CHECKED
A	21-02-11	First Issue	SR	PF

This drawing has been reviewed and signed off by McDonald's Restaurants Ltd any errors, changes or discrepancies should be reported to the McDonald's project manager and designers prior to commencing work on site

Name (PM): Date:

Signature:

GENERAL NOTES:
All works are to be undertaken in accordance with the Building Regulations and the latest British Standards.
All proprietary materials and products are to be used solely in accordance with the manufacturers recommendations.
All dimensions to be checked on site prior to construction.

PROPOSED DEVELOPMENT AT: Eastern Avenue, Shoreham, BN43 6PW — STORE No.: 1256

ON BEHALF OF: McDonald's Restaurants Ltd

DRAWING TITLE: Proposed Monument Sign

DRAWN BY	CHECKED BY	DRAWING No.	REV No.
SR	PF	0912-1256-22	A
SCALE & SIZE: 1:20@A2	DATE: 21-02-11		

C7 Architects LLP
The Studio, Rear of
27 The High Street
Godalming, Surrey
GU7 1AU