

West elevation 1:100 East

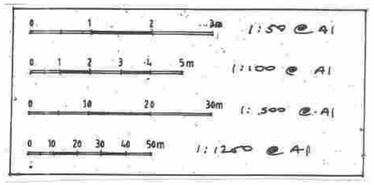

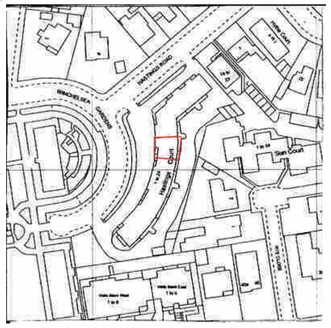

Site plan 1:1250

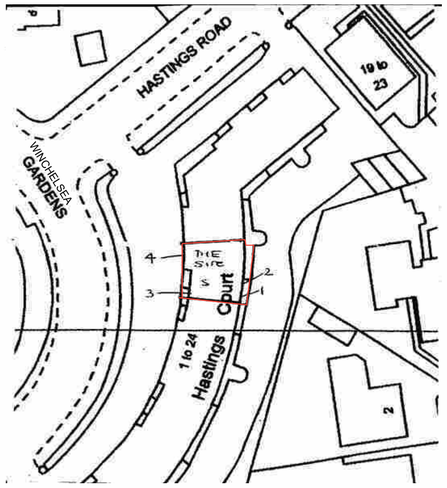

Block plan 1:500

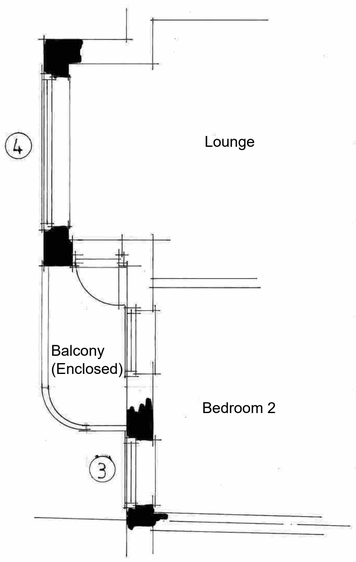

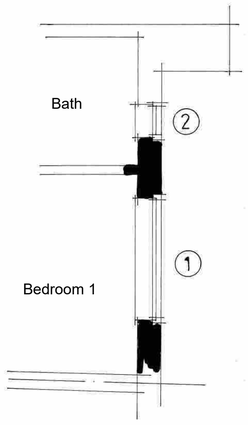

Ground floor plan 1:50

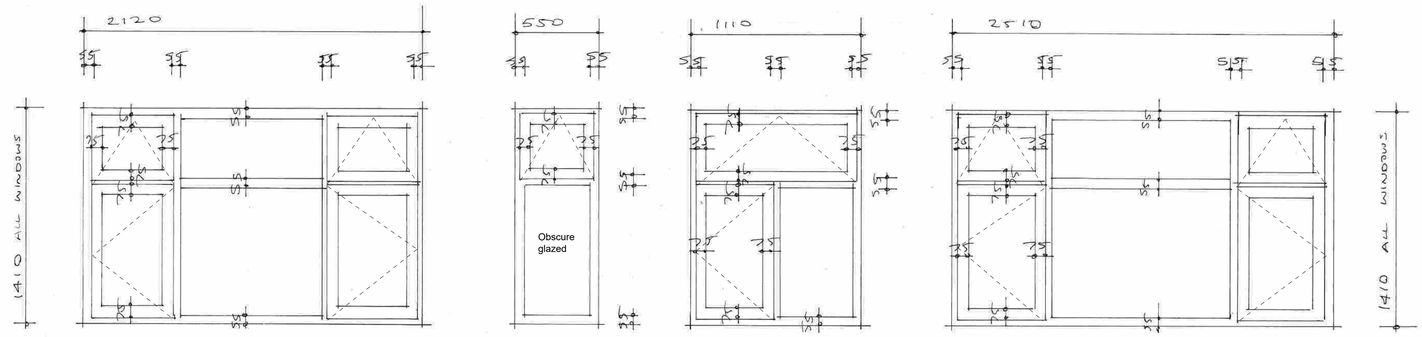

Proposed units 1:20 White uPVC

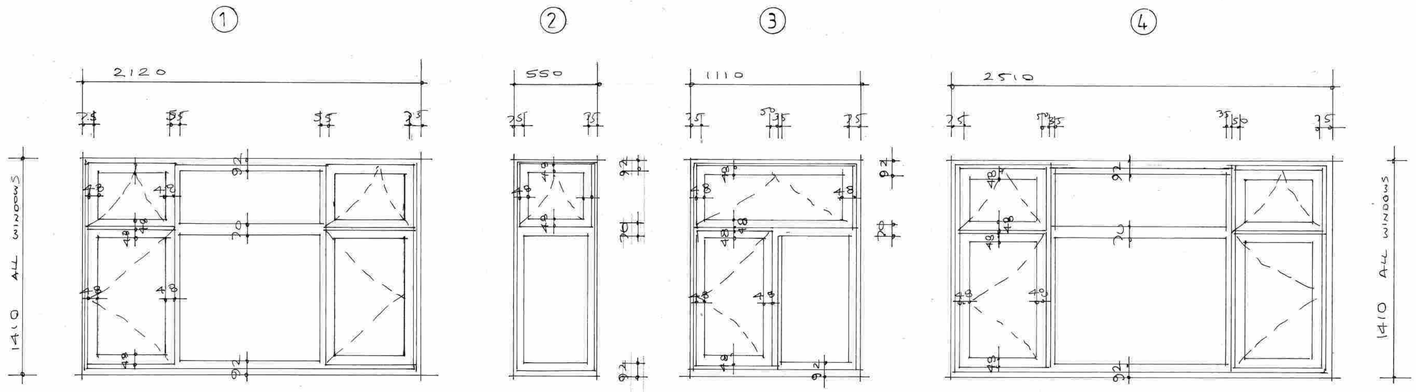

Existing units 1:20 White uPVC

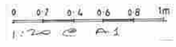

AJ SALTER & SON
Architectural Technicians and Surveyors
50 WINDSOR ROAD, WORTHING,
WEST SUSSEX, BN11 2LY
Tel/Fax: (01903 209496)
E-mail: ajsalterandson@hotmail.com

C			
B			
A			
Client	Mr & Mrs Franklin		
Address	5 Hastings Court : Winchelsea Gdns : Worthing		
Drawing	REPLACEMENT WINDOWS	No.	3724:1
Scale	1:20 1:50 1:100 1:500 1:1250	Drawn IS	Date Nov 24