ELEVATIONS
SCALE 1:200

3D CGI Display Map
Sportsfm Arena
PROPOSED SIGNS WINDOWS
& AIRCON. UNITS

WEST ELEVATION

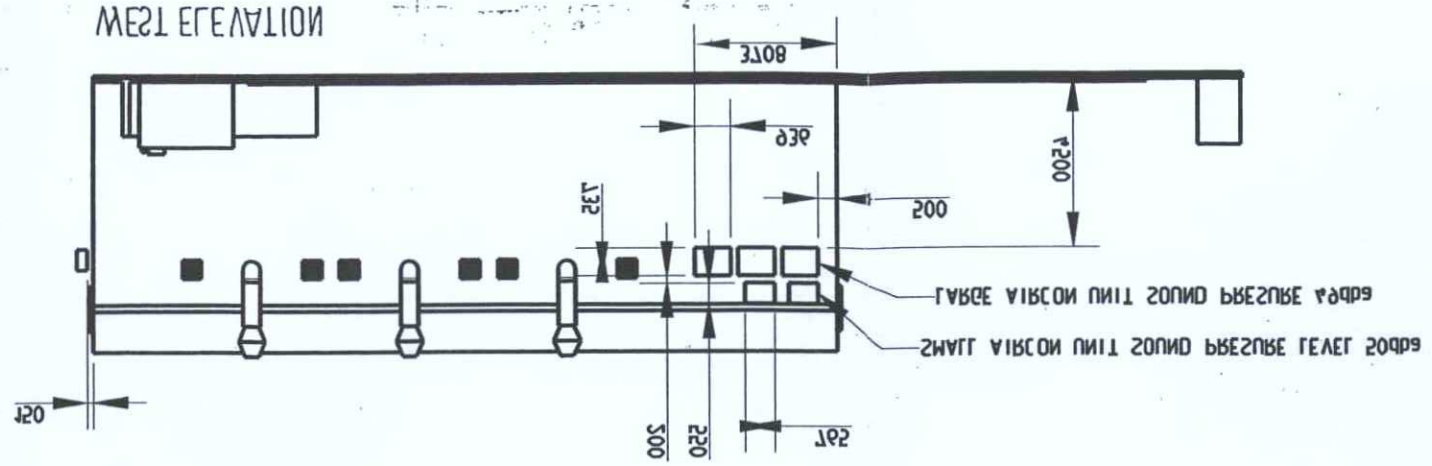

Scale 1:200
0 2.5 5 7.5 10metres

NORTH ELEVATION
(facing airside)

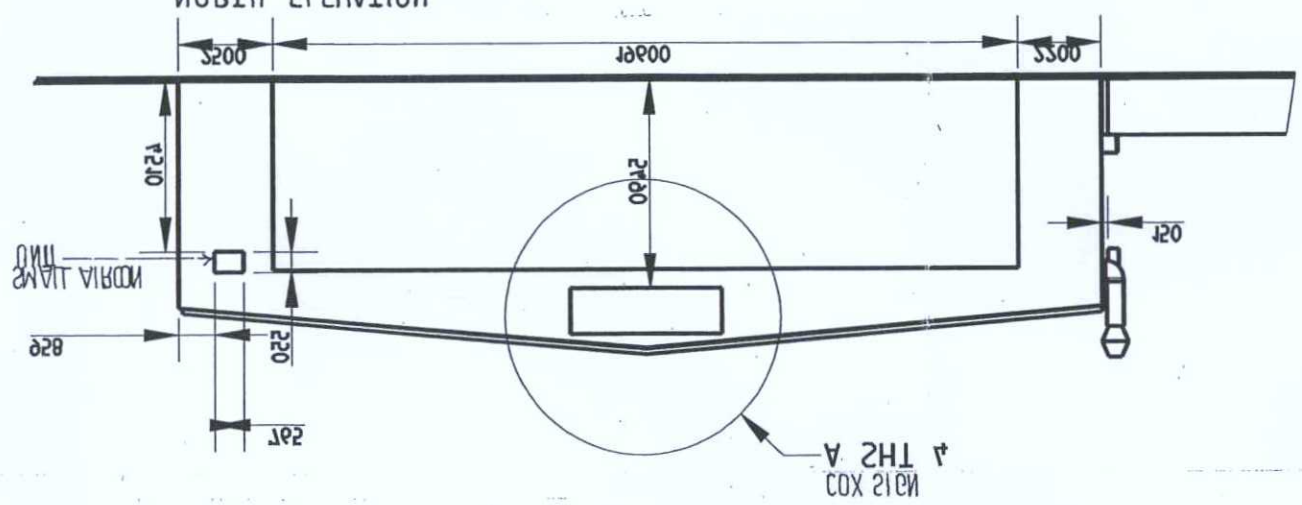

SOUTH ELEVATION
(airside side)

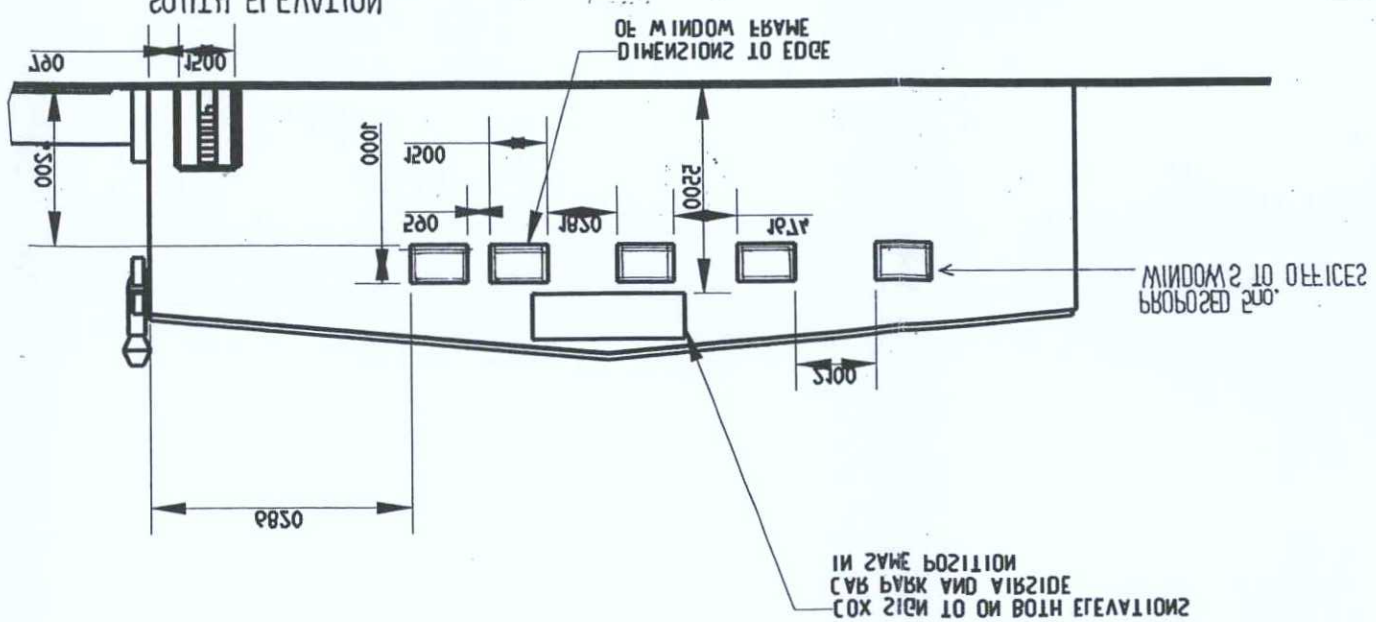

21.10.15 Updated to amended plans

Drawing No.	B_TUOYAL_REDNAH	Drawn	Checked	Date	Scale	Size	Rev.
Title	3D CGI Display Map Sportsfm Arena PROPOSED SIGNS WINDOWS & AIRCON. UNITS ELEVATIONS	Dept.	Approved	2015	1:200	A3	B

Project	Proposed Box Sign	Material	Checked	Date	Scale	Size	Rev.
Client	Sportsfm Ltd	Manufacturing	Approved	25MAR15	1:100	A1	-