

Tel: 01903 504317
Mobile: 07969 104421
E mail:*elsteadbysea@btinternet.com*

Phillip J. Ellis MI Hort, Tech Cert (Arb.A)
"Elstead",
61 Alinora Avenue,
Goring by Sea,
West Sussex,
BN12 4LR.

ADUR DISTRICT COUNCIL
PLANNING DIVISION
PLAN No Arb/a 8/07
DATE RECEIVED 27 MAR 2007

ARBORICULTURAL REPORT IN RELATION TO DEVELOPMENT PROPOSALS

LOCATION: Fairview Road, North Lancing, West Sussex.	**REF:** PJE/HA /01/07
CLIENT: Harlington Homes Ltd	**DATE:** 22nd March 2007
REPORT BY: Phillip J. Ellis MI Hort Cert Tech Arb	**INSPECTION DATE:** 20th March 2007
SURVEYED BY: Phillip J. Ellis MI Hort Cert Tech Arb	**PAGE No:** 1 of 23

INSTRUCTIONS: **Issued by:** Harlington Homes Ltd

Terms of Reference: To inspect the significant trees in accordance with British Standard 5837:2005 'Trees in relation to construction' and assess their suitability for retention in relation to the development of the site. To provide guidance on measures that should be taken to ensure the protection of retained trees and successful integration of the proposed development.

Documents Supplied:

- Existing topographical plan 24/01/07and plan 206/P/02 showing the superimposed image of the proposed site layout in PDF format.

Summary

Proposal to construct four houses in the rear garden of number 4 & 6 Fairfield Road, Lancing, West Sussex. and part of garden to numbers 67 and 77 Mill Road. There are 34trees on the site that will affect the development.

Limitations of Use and Copyright:

The content and format of this Report are for the exclusive use of the Client. It may not be sold, lent, hired out or divulged to any third party not directly involved in the subject matter without our written consent.

Please note that abbreviations introduced in [square brackets] are used throughout this report

CONTENTS

		Page
Tree Survey		3
1	Scope of Survey	
2	Survey Method	
3	The Site	
4	Existing Trees	
The Development		5
5	Development Appraisal	
6	Arboricultural Implications Assessment	
7	Tree Protection Measures	
Arboricultural Method Statement		10
8	Preliminary Works	
9	Installation of New Path Adjacent to ?	
10	Underground Services	
11	Arboricultural Supervision	
Conclusion		11
Recommendations		12

APPENDICES

A Tree Survey - Schedule of Trees
Key
Table 1, BS5837: 2005 – Cascade Chart for Tree Quality Assessment
Plan 1 - Plan DHA/559/01 Tree retention, removal and tree protection
B Root Protection Areas – Retained Trees
C Protective Barriers [BS 5837:2005 Figure 2)
D Scaffolding within a Root Protection Area
E Method Statement for the Removal of Hard Surfacing near Trees
F Installation of 'No Dig' Driveways Close to Trees
G Common Causes of tree death

TREE SURVEY

1.0 Scope of Survey

1.1 The survey is concerned with the arboricultural aspects of the site only.

1.2 The survey was carried out on the 20th March 2007 by P.J. Ellis. A previous survey carried out last September for purpose of a Tree Preservation order on the site has been used as basis of the report. As the area of the site has been reduced trees outside the existing site have been excluded and six additional trees have been added to the report.

1.3 The planning status of the trees on site was not investigated, however it is understood that outline planning permission is being sought from Adur District Council for the construction of four private houses. The planning application requires the submission of an arboricultural survey and report in accordance with British Standard 5837: 2005 'Trees in relation to construction' and details the condition of existing trees and the measures to be implemented to ensure that retained trees are appropriately protected from the effects of construction. For the purposed of this report, these areas will be referred to as 'the site'.

1.4 This survey is restricted to trees within the site or those outside the site that may be affected by its re-development. No other trees were inspected.

1.5 The survey was carried out following guidelines detailed in British Standard 5837:2005 'Trees in relation to construction - Recommendations' [BS5837]

1.6 The trees were inspected based on the Visual Tree Assessment method expounded by Mattheck and Breloer (The Body Language of Trees, DoE booklet Research for Amenity Trees No. 4, 1994).

1.7 Any observations made with regard to the condition of built structures are from a layperson's view.

2.0 Survey Method

2.1 The survey was conducted from ground level with the aid of binoculars.

2.2 No tissue samples were taken nor was any internal investigation of the subject trees undertaken.

2.3 No soil samples were taken.

2.4 The height of each tree was estimated using a clinometer.

2.5 The trunk diameters [SD] of single stemmed trees were measured in centimetres at 1.5m above ground level. Multi-stemmed trees were measured immediately above the root flare.

2.6 The crown radii were estimated by pacing and are given for each main compass point: north, east, south and west.

2.7 The positions of trees are taken from the provided site plan and are shown plotted on an amended version of that plan at Appendix A – Plan 1.

3.0 The Site

3.1 The site is located in Fairview Road North Lancing accessed from the A27 in the rear of number 4 & 6.

3.2 Soil depth is not indicated but there is no reason to suppose that it would be inadequate for normal tree root development based on existing trees on site. The existing soil is shallow and overlays chalk.

3.3 The site is bordered on three sides by private gardens to the adjoining properties. To the south is the access road to the property. Within the site there are number of ash trees very close to each other that has resulted on long stems with weak crowns. Some trees have been removed over the years and some lopping to a poor standard has been carried out. Due the shallow soil many of the roots are close to the surface and have suffered damage from mowers.

3.4 The site has a steady fall towards the south and the existing houses constructed on level ground are surrounded on the north side by retaining walls.

4.0 Existing Trees

4.1 Only trees of significant stature were surveyed. Trees with a stem diameter (SD) less than150mm have in general been excluded.

4.2 In some cases groups of trees are discussed collectively where individual identification has been deemed unnecessary.

4.3 Each tree has been assessed in terms of its Arboricultural, landscape, cultural and conservation values in accordance with BS 5837:2005 'Trees in relation to construction' and placed within one of the following categories:

Category R: Trees in such condition that any existing value will be lost within 10 years and which should , in the current context, be removed for reasons of sound Arboricultural contribution (a minimum of 40 years is suggested)/

Category A: Trees of high quality and value: in such a condition as to make a significant contribution (a minimum of 40 years is suggested)

Category B: Trees of moderate quality and value: those in such a condition as to make a significant contribution (a minimum of 20 years is suggested).

Category C: Trees of low quality and value which might remain for a minimum of 10 years or young trees with stems less than 150mm diameter.

4.4 Whilst the assessment of a trees condition is a subjective process, Table 1 of British Standard 5837: 2005 (see appendix 1a) gives clear guidance on the appropriate criteria for categorizing trees and in, particular, the factors that would assist the Arboricultralist in determining the suitability of a tree for retention.

Category R criteria from BS 5837:2005 - Table 1:

- *Trees that have a serious, irremediable, structural defect, such that their early loss is expected due to collapse, including those that will become unviable after removal of other R category trees (i.e. where, for whatever reason, the loss of companion shelter cannot be mitigated by pruning)*
- *Trees that are dead or are showing signs of significant, immediate, and irreversible overall decline*
- *Trees infected with pathogens of significance to the health and/or safety of other trees nearby (e.g. Dutch elm disease), or very low quality trees suppressing adjacent trees of better quality.*

4.5 BS 5837 makes a clear differentiation between tress on development sites and trees in other situations where retention of lower quality trees may be acceptable or possible for the short term.

4.3.4 *In the categories A, B, C, which together deal with trees that should be a material consideration in the development process, the subcategories are intended to reflect arboricultural, landscape and cultural values respectively. Category R trees are those that would be lost in the short term for reasons connected with their physiological or structural condition. For this reason, they should not be a consideration in the planning process.*

4.3.7 *When assigning trees to any of the categories, the presence of any serious disease or tree-related hazards should be taken into account. If disease is fatal and/or irremediable or likely to require sanitation for the protection of other trees, the trees concerned may need to be categorized as R, even if they otherwise have considerable value. If mechanical defects present an unacceptable risk to people and property, the extent to which the defects are remediable, including the effect that this might have on the tree's remaining value, should indicate whether the tree should still be assigned to the category that it would otherwise merit.*

4.6 Thirty-four trees were identified within the site. One additional tree a Bay tree (T2) in the garden of 69 Mill Hill has been included as its Root system could potentially be affected by construction activity.

4.7 Fifteen trees were graded as category R and should be removed in the interests of good arboricultural practice.

4.8 Two trees were graded as category A.

4.9 Fourteen trees were graded as category B. Generally these trees do have a high individual merit however they have some landscape significance and can be expected to thrive for 20 years or more.

4.10 Two trees were graded as category C. These trees are of low quality or have low individual landscape value and may have some screening value.

4.11 The surveyed trees are listed in Appendix A which includes a key and explanatory notes. A tree survey plan based on the existing site plan provided is included as Plan 1 within Appendix A.

THE DEVELOPMENT

5.0 Development Appraisal

5.1 Planning permission has not yet been granted for the development.

5.2 For the purposes of the development it will be necessary for an area to be used for site huts and as a temporary storage area for materials. It is assumed that this area would be at the end of the existing drive that is a level area.

5.3 No specific information has been provided regarding the positioning of any new underground services.

6.0 Arboricultural Implications Assessment

6.1 The primary criterion in arboricultural terms is the retention of as many appropriate trees as is practicable. Quite apart from the requirement to retain some of the existing character, the presence of trees is generally accepted as being beneficial to the environment. The following is an assessment of the effects of the proposed development on existing trees and the future landscape. Full details of recommended works are provided within the schedule of trees at Appendix A.

Recommended tree removals for reasons of sound arboricultural management

6.2 The removal of fifteen category R trees, 1963, 1964, 1965, 1966, 1967, 1968, 1969, 1970, 1971, 1976, 1977,1979, 1980, 1981, 1984 and 1985 is recommended as a matter of good arboricultural practice and would be advisable irrespective of these development proposals.

Tree Losses to facilitate the development

6.3 To allow the development to proceed as planned will mean further eleven tree losses. Numbers: 1961, 1971, 1972, 1973, 1974, 1983, 1985, 1986, 1987, 1988 & T4.

6.4 These losses are not substantial and will not result in a great loss of amenity. It will however give scope for planting replacement trees more appropriate for the development.

Tree pruning required to facilitate development

6.5 Some tree pruning works will be required before the construction commences and are of a relative minor nature. The pruning works are included in the schedule of trees at Appendix A.

6.6 The pruning works are relatively minor in nature and will have little, if any effect on the outward appearance of the site but will assist in the future well being of the retained trees.

Encroachment of the Root Protection Area

6.7 Extensive excavations will take place on this site due to the slope to create level areas for the houses. It is therefore essential that the root protection areas be reinforced during the development.

6.8 Extensive excavation near tree numbers 1975 and 1978 will occur with new surfacing for the drives could potentially cause some damage to any roots under the existing surface and as a precaution, it will be essential to apply robust and effective protection measures to ensure that any roots in this area are adequately safeguarded from damage. In the case of tree 1978 it may be necessary to consider this tree again during the construction as the roots that are shallow may not provide sufficient anchorage if severed for the construction of the driveway.

6.9 Whilst most of the vehicular traffic connected with this development will be restricted to the new access and site compound. To avoid significant damage to roots it will be necessary for the soil surface in this area to be protected from disturbance and the risk of contamination by toxic materials throughout the period of construction.

6.10

Landscaping

6.11 Whilst the combined loss of the category R trees and others for the development will inevitably have some effect on the appearance of the site, there is ample scope for replacement planting along the eastern boundary of the site.

6.12 Consideration should therefore be given to concentrating any replacement tree planting in the gardens of the new houses especially to the eastern edge and middle of the site.

Future Pressures/ Shading

6.13 The remaining trees will inevitably cause some shading to the new houses, however this will not be excessive or unreasonable. There will be uninterrupted daylight from the west from the adjoining property and the separation between tree canopies and the buildings will allow significant amounts of daylight through to habitable rooms.

6.15 I consider that the relationship between the development and retained trees to be tenable and similar to that being enjoyed by many similar developments in the area. I do not foresee any significant post development pressures for the removal or inappropriate pruning of retained trees

6.16 Due to the presence of trees on site and off site it would be prudent to design the rainwater collection system to allow easy maintenance such as meshed grill caps or easily cleanable traps to down pipes for leaf collection. It is important that these be checked during leaf fall and after to prevent flooding into the buildings.

Underground services

6.13 Whilst no specific information has been provided regarding services it is anticipated that new underground services can be achieved without passing through, or close to, the root protection areas of retained trees.

7.0 TREE PROTECTION MEASURES

Root Protection Area

7.1 BS5837 provides guidance within paragraph 5.2 on the creation of a root protection area [RPA] to avoid damage to the roots or rooting environment around retained trees. This is a minimum area in square metres that should be left undisturbed around each retained tree. The RPA of each retained tree is given at Appendix B and shown in.

7.2 In the case of open grown trees with an even, radial root distribution it would normal for the boundaries of the RPA to be equidistant from the trunk of the tree. However, BS5837 acknowledges that the disposition of tree roots can be significantly affected by a number of factors and that the actual position of the RPA will be influenced by specific tree and site factors. These factors are to be assessed by the Arboriculturist and appropriate adjustments to the siting of the RPA made.

7.3 The RPA for the retained trees is shown at Appendix B - Plans

Tree Protection Barriers

7.4 BS5837 requires that the RPA of all retained trees are protected from the effects of development by the installation of protective barriers as described in Section 9.2. These protective barriers demarcate the 'Construction Exclusion Zone' [CEZ] and should be installed prior to the commencement of any construction works, including clearance or demolition. They should be maintained for the duration of the works. All weather notices should be erected on the barriers with words such as 'Construction exclusion zone – Keep out'. Protective barriers should be in accordance with Figure 2 of BS5837, a copy is included as Appendix C.

7.5 The position of protective barriers and the boundary of the CEZ are shown as a dashed blue line in Plans 2 and 2a at Appendix B. For practical reasons I would recommend fencing off the entire grass verge in front of the new building.

7.6 The area within the Construction Exclusion Zone is to be regarded as sacrosanct and protective fences and barriers should not be taken down without the written approval of the Local Planning Authority, or where present, the supervising Arboricultural Consultant.

Ground Protection

7.7 Where it is necessary, for the construction operation, to permit vehicular or pedestrian access within the RPA, for example to erect scaffolding, retained trees should be further protected by a combination of barriers and ground protection in accordance with Figure 3 in BS 5837. A copy is included at Appendix D. This ground protection should be of sufficient strength and rigidity to prevent disturbance or compaction to the soil underneath (e.g. Ground-Guards supplied by *GreenTek* – 0113 267 6000 (www.groundprotection.co.uk).

7.8 Contamination of the soil by any substances should be prevented by the use of geotextile fabric.

7.9 The position of ground protection is shown as a pale blue block in Plans 2 and 2a at Appendix B.

Protection of Tree Trunks

7.10 Due to their proximity to the area of construction activity, the trunks and root buttresses of trees 1975 and 1978 will require additional protection to prevent direct physical damage from machinery and vehicles.

7.11 This protection should take the form of a robust vertical barrier constructed from strong timber or scaffolding. It should be securely fixed in a position that allows a minimum gap of 300mm between the barrier and the trunk and buttresses of the tree. The barrier should be at least 2m high and should afford protection from any direction from which the risk of injury may arise.

7.12 Where the risk of damage to tree trunks is from high sided vehicles, as with tree 1975, it may be necessary to provide protection to a height equal to that of the vehicles that will be employed in the delivery of construction materials.

7.13 It is normal for there to be a concentration of larger roots in close proximity to the tree trunk, therefore great care should be exercised with the installation of any supports for protective barriers that penetrate the soil. During the erection of protective barriers, it may be necessary for the position of any supports to be adjusted to avoid damage to significant roots.

Cranes and Excavators

7.14 Particular care and planning is necessary to accommodate the operational arcs of excavation, unloading and lifting machinery, including their loads, especially large building components such as beams and roof trusses. Operations like these have the potential to cause incidental damage to trees and logistical planning is essential to avoid conflicts.

7.15 Therefore, any transit or traverse of plant and materials in close proximity to trees should be conducted under the supervision of a banksman to ensure that adequate clearance from trees in maintained at all times.

General Tree Protection Measures

7.16 Do not raise or lower soil levels or strip topsoil around trees - even temporarily.

7.17 Avoid disturbing the natural water table level.

7.18 Do not light fires near trees.

7.19 Do not attach notice boards, telephone cables or other services to any part of a tree.

7.20 No construction materials should be stored within root protection areas. Toxins such as diesel, petrol or cement should be suitably stored to prevent such substances leaching into the soil.

7.21 In addition to protecting existing trees, BS 5837 recommends that areas of the site in which new or replacement tree planting is proposed should also be protected from the effects of construction. There is ample space within those areas already areas already identified as 'construction exclusion zones' for post development tree planting and landscaping and it is not necessary to specifically protect additional areas for this purpose.

ARBORICULTURAL METHOD STATEMENT

8.0 Preliminary Works

8.1 Prior to the commencement of any other works the tree removal and pruning specified in Appendix A should be carried out by an appropriately qualified tree contractor.

8.2 Tree protection barriers, ground protection and additional protection for the trunk of 1975 and 1978 as detailed in section 7, in conjunction with Plan DHA/559/01 Tree retention, removal and tree protection, should be installed prior to the commencement of any site clearance or construction works.

8.3 The demolition of any existing structures and site clearance should be carried out in accordance with the method statement at Appendix E.

8.4 Where any existing hard surface within the RPA of a retained tree, for example 1975, is to be removed it should be carried out in accordance with the method statement at Appendix E. General stripping of the hard surface and underlying soil must be avoided. Once the hard surface is removed the area must be protected from construction damage by appropriate barriers and/or ground protection as described in paragraphs 7.4 to 7.13 of this report.

8.5 Where the west side of unit 1 is close to the high hedge to the garden of no. 8 Fairview Road, any excavations should be carried out by hand and avoid bringing in new services along this route. Refer to paragraph 10.2 below for advice.

8.6 The position of any site huts, materials storage and any on site car parking for contractors should be clearly identified. The preferred location, from an arboricultural perspective, of site huts and materials storage is shown in Plan DHA/559/01 Tree retention, removal and tree protection.

8.7 Tree protection measures shall remain in place until completion of the development and may only otherwise be removed to facilitate any post development landscaping.

9.0 Underground Services

9.1 We have seen no information regarding the installation of underground services and it is assumed that, installation of services can be achieved with out trespassing within RPAs of retained trees.

9.2 Should the installation of underground services within a RPA be unavoidable, it is essential that it is carried out in accordance with National Joint Utilities Group Booklet 10 1995 'Guidance for the Planning, Installation and Maintenance of Utility Services in Proximity to Trees' [NJUG10] and under the supervision of the Arboriculturist.

10.0 Arboricultural Supervision

10.1 Installation of tree protection measures should be supervised by an appropriately experienced Arboriculturist who should be appointed to monitor the observance of those measures for the duration of the development.

10.2 The Arboriculturist should directly supervise any works that have to be undertaken within RPAs. These include the removal of any hard surfacing, the installation of any underground services and the construction of any new footpaths or hard surfaces.

10.3 The Arboriculturist should make weekly site inspections and keep a written log of the results of those inspections. Any contraventions of the tree protection measures or other incident that may prejudice the well being of retained trees shall be brought to the attention of the site manager in the form of a written report. Copies of the inspection log and any contravention reports will be available at the site for inspection by the Local Planning Authority at all times.

10.4 The Arboriculturist should be informed immediately of any accidental damage made to trees and make written recommendations to rectify damage.

CONCLUSION

11.1 These development proposals have been assessed in accordance with British Standard 5837: 2005 'Trees in relation to construction'

11.2 A number of tree removals are required to facilitate the development. A very limited amount of crown pruning will however be required to ensure adequate clearance of the proposed buildings.

11.3 All the retained trees will be protected from the effects of development by means of appropriate protective barriers and ground protection throughout the duration of the works.

11.4 The observance of the Arboricultural Method Statement, together with any additional guidance from the Arboricultralist will ensure the successful integration of these proposals with the retained trees.

11.5 A number of significant mature trees are to be retained. These will be protected from the effects of development by means of appropriate protective barriers and ground protection throughout the duration of the works.

11.6 The observance of the Arboricultural Method Statement, together with any additional guidance from the Arboriculturist will ensure the successful integration of these proposals with those trees worthy of retention.

11.7 In consideration of the information provided and my own site observations I am satisfied that the proposals for this site are arboriculturally sound and that the long term well being of retained trees will be safeguarded in a sustainable manner.

RECOMMENDATIONS

12.1 Pruning works as specified in the schedule of trees should be carried out both in the interests of sound arboricultural management and, where required, to avoid damage to trees during construction.

12.2 The tree protection measures detailed in this report should be implemented and supervised by an appropriately experienced Arboricultralist.

12.3 Appropriate post development landscaping proposals should be implemented to ensure sustained, effective tree cover on the site.

The statements in this Report do not take account of the effects of extremes of climate, vandalism or accident, whether physical, chemical or fire. We cannot therefore accept any liability in connection with these factors, nor where prescribed work is not carried out in a correct and professional manner in accordance with current good practice. The authority of this Report ceases at any stated time limit within it, or if none stated after two years from the date of the survey or when any site conditions change, or pruning or other works unspecified in the Report are carried out to, or affecting, the subject tree(s), whichever is the sooner

Appendix A – Schedule of trees

P	No	Species	SD	H	Crown Radius N	E	S	W	A	PC	SC	Comments	Recommendations	Life Exp	BS837 Category
T	T1	Bay	.3	4	1	1	1	1	M	G	G	Maintained as hedge	None	40>	A
T	196	Sycamore-	.17	9	6	6	6	6	MA	G	G	Exposed roots	Remove to facilitate development	20>	B
T	196	Sycamore	.24	11	3	3	3	3	MA	G	F	Squirrel damage & exposed roots	Repair crown	40>	C
T	196	Sycamore	.18	16	4	4	4	4	MA	P	F	Poor form	Remove tree for Arboricultural reasons.	5>	R
T	196	Ash	.48	16	6	6	6	6	MA	P	F	Decay in trunk, stubs, branch tear	Remove tree for Arboricultural reasons	5>	R
T	196	Ash	.3	16	3	3	3	3	M	P	P	Poor form, cavity in base	Remove tree for Arboricultural reasons.	5>	R
T	196	Ash	.31	16	3	3	3	3	MA	P	P	Exposed roots, pruning wound.	Remove tree for Arboricultural reasons.	5>	R
T	196	Ash	.24	16	4	4	4	4	MA	P	P	Poor form	Remove tree for Arboricultural reasons.	5>	R
T	196	Ash	.16	16	4	4	4	4	MA	P	P	Poor form	Remove tree for Arboricultural reasons.	5>	R
T	196	Ash	.25	16	2	3	3	1	MA	E	P	Poor form	Remove tree for Arboricultural reasons.	5>	R
T	197	Ash	.18	16	3	3	3	2	MA	P	E	Poor form with broken branch	Remove tree for Arboricultural reasons.	5>	R
T	197	Ash	.25	16	3	3	3	3	MA	P	P	Split in bark, cankker and deadwood	Remove tree for Arboricultural reasons.	5>	R
T	197	Ash	.22	16	3	3	3	3	MA	P	E	Ivy on trunk	Remove to facilitate development	20>	B
T	197	Yew	1.5	6	1.5	1.5	1.5	1.5	M	G	G	Regrown hedge	Remove to facilitate development	20>	B
T	197	Ash	.3	14	3	4	4	4	M	F	F	Fair condition	Remove to facilitate development	10>	B

p	No	Species	SD	H	Crown Radius N	E	S	W	A	PC	SC	Comments	Recommendations	Life Exp	BS837 Category
T	1975	Ash	.32	13	4	4	4	4	M	G	F	Broken branch	Repair Will require retraining wall	20>	B
T	1976	Ash	.42	14	6	6	6	6	M	F	P	Exposed roots damaged, risk of infection Remove tree for Arboricultural reasons		5>	R
T	1977	Ash	.3	14	3	3	3	3	MA	F	F	Overshadowed by adjacent trees Remove tree for Arboricultural reasons		5>	R
T	1978	Ash	.38	14	5	4	5	5	M	F	F	Exposed roots with minor deadwood Cleanout deadwood	Will require retraining wall	20>	B
T	1979	Ash	.25	14	3	3	3	3	MA	F	F	Deadwood Remove tree for Arboricultural reasons & too close to drive		20>	B
T	1980	Ash	.27	15	2	2	2	2	M	P	P	Twin stem Weak fork with splits Remove tree for Arboricultural reasons		5>	R
T	1981	Sycamore	.24	12	2	2	2	2	MA	P	P	Poor crown Remove tree for Arboricultural reasons		5>	R
T	1982	Sycamore	.24	10	4	4	4	4	MA	F	G	Grows against existing fence Not affected by development		20>	B
T	1983	Yew	.15	6	1.5	1.5	1.5	1.5	M	F	F	Overgrown hedge Remove to facilitate development		20>	B
T	1984	Holly	.15	6.5	1.5	1.5	1.5	1.5	M	F	F	Overshadowed by 1982 Remove tree for Arboricultural reasons		5>	R
T	1985	Lime	.4	13	4	4	4	4	OM	P	P	3 stems, Regrown pollard, one stem decayed Remove tree for Arboricultural reasons		5<	R
T	1986	Horse Chestnut	.26	12	3	3	3	3	MA	F	F	Weak fork with epicormic growth Remove to facilitate development		20>	B
T	1987	Ash	.45	12	2	2	2	2	M	F	F	Ivy on trunk with minor deadwood Remove to facilitate development		20<	B
T	1988	Sycamore	12	.22	2	2	2	2	MA	G	G	Ivy on trunk with basal growth Remove to facilitate development	None	20>	B
T	T2	Bay	Multi	8	4	4	4	4	M	G	F	Good form	None	20>	B
T	T3	Holly	.15	5	2	2	2	2	M	F	F	Good condition	None	10>	C

P	No	Species	SD	H	Crown Radius N	E	S	W	A	PC	SC	Comments	Recommendations	Life Exp	BS837 Category
T	T4	Yew	.3	9	3	2	2	2	M	G	G	Typical form growing well	Remove to facilitate development	40>	B
T	T5	Sycamore	.3	10	4	4	4	4	M	F	F	Multistem	None	20>	B
T	T6	Yew	.3	8	2	5	5	2	M	G	G	Typical form growing well requiring pruning to maintain size in the future	Reduce crown spread on south side by 1 metre	40>	A

Appendix A - Key

1. **Prefix:** This indicates whether the tree or trees are an individual, a group, a woodland or a hedge (T, G, W or H)
2. **Tree No:** Relates to individual tree numbers on a plan or, where used, tags on trees or groups of trees
3. **Species:** The name given is the 'common name'. Where Latin names are given they are shown in *italics*
4. **SD:** Trunk diameter at 1.5 metres ('breast height') above ground level, given in millimetres. In the case of multi-stemmed trees (ms) the stem diameter is taken just above the root flare
5. **H** (Height) The height measured in metres with the aid of a clinometer
6. **R (Crown radius)** The average crown spread taken from the centre of the trunk to the tips of the live lateral branches given in metres. May be given as separate measurements following the compass points N-E-S-W.
7. **Age:**
   - Y Young
   - MA Middle aged - 1/3 to 2/3 life expectancy
   - M Mature - over 2/3 life expectancy
   - OM Over-mature - fully mature, past peak condition and beginning to decline
   - V Veteran - trees of interest biologically, aesthetically or culturally because of significant age.
8. **PC:** Physiological Condition – An assessment of the health and vigour of the tree compared with what would normally be expected of the species:
   - G Good
   - F Fair
   - P Poor
   - D Dead
9. **SC:** Structural Condition – An assessment of the physical structure taking in to account any defects:
   - G Good
   - F Fair
   - P Poor
   - D Dead
10. **Comments:** Comments have been made in relation to the following:
    - Health or condition
    - Structural defects/safety
    - Aesthetics
    - Future potential
    - Relationship to other trees or features
    - Extent of ivy growth, if present
    - Any other relevant details
11. **Recommendations:** Preliminary management recommendations in relation to the proposed development are made where appropriate. These may include remedial tree works that are deemed necessary to improve the quality of the tree or for safety reasons. Recommended tree works will be required to be in accord with British Standard 3998:1989 Tree Work [BS3998].
12. **Life Expectancy**: an estimate of the future life expectancy of the tree(s) in the present setting given normal circumstances, given in years (< = less than > = greater than).
13. **BS5837 Category**: A qualitative assessment of the tree based on criteria detailed in BS5837:2005 Table 1 (See appendix 1a)
    - R: Trees for removal
    - A: Those of high quality and value
    - B: Those of moderate quality and value
    - C: Those of low quality and value

Please note that trees are living organisms and their condition is subject to change over time. Assessments are based on their condition on the day of inspection and cannot cover unforeseen circumstances.

Table 1 — Cascade chart for tree quality assessment

TREES FOR REMOVAL				
Category and definition	**Criteria**			**Identification on plan**
Category R Those in such a condition that any existing value would be lost within 10 years and which should, in the current context, be removed for reasons of sound arboricultural management	• Trees that have a serious, irremediable, structural defect, such that their early loss is expected due to collapse, including those that will become unviable after removal of other R category trees (i.e. where, for whatever reason, the loss of companion shelter cannot be mitigated by pruning) • Trees that are dead or are showing signs of significant, immediate, and irreversible overall decline • Trees infected with pathogens of significance to the health and/or safety of other trees nearby (e.g. Dutch elm disease), or very low quality trees suppressing adjacent trees of better quality NOTE Habitat reinstatement may be appropriate (e.g. R category tree used as a bat roost: installation of bat box in nearby tree).			DARK RED
TREES TO BE CONSIDERED FOR RETENTION				
Category and definition	**Criteria — Subcategories**			**Identification on plan**
	1 Mainly arboricultural values	**2 Mainly landscape values**	**3 Mainly cultural values, including conservation**	
Category A **Those of high quality and value:** in such a condition as to be able to make a substantial contribution (a minimum of 40 years is suggested)	Trees that are particularly good examples of their species, especially if rare or unusual, or essential components of groups, or of formal or semi-formal arboricultural features (e.g. the dominant and/or principal trees within an avenue)	Trees, groups or woodlands which provide a definite screening or softening effect to the locality in relation to views into or out of the site, or those of particular visual importance (e.g. avenues or other arboricultural features assessed as groups)	Trees, groups or woodlands of significant conservation, historical, commemorative or other value (e.g. veteran trees or wood-pasture)	LIGHT GREEN
Category B **Those of moderate quality and value:** those in such a condition as to make a significant contribution (a minimum of 20 years is suggested)	Trees that might be included in the high category, but are downgraded because of impaired condition (e.g. presence of remediable defects including unsympathetic past management and minor storm damage)	Trees present in numbers, usually as groups or woodlands, such that they form distinct landscape features, thereby attracting a higher collective rating than they might as individuals but which are not, individually, essential components of formal or semi-formal arboricultural features (e.g. trees of moderate quality within an avenue that includes better, A category specimens), or trees situated mainly internally to the site, therefore individually having little visual impact on the wider locality	Trees with clearly identifiable conservation or other cultural benefits	MID BLUE
Category C **Those of low quality and value:** currently in adequate condition to remain until new planting could be established (a minimum of 10 years is suggested), or young trees with a stem diameter below 150 mm	Trees not qualifying in higher categories	Trees present in groups or woodlands, but without this conferring on them significantly greater landscape value, and/or trees offering low or only temporary screening benefit	Trees with very limited conservation or other cultural benefits	GREY
	NOTE Whilst C category trees will usually not be retained where they would impose a significant constraint on development, young trees with a stem diameter of less than 150 mm should be considered for relocation.			

Appendix B – Root Protection Areas (RPA) of Retained Trees

P	No	Species	SD	RPA (m2)	RPA Radius (m)
T	TI	Bay	.3	40	3.6
T	1962	Sycamore	.24	28	3.00
T	1975	Ash	.32	50	4.00
T	1978	Ash	.38	63	4.5
T	1982	Sycamore	.24	28	3.00
T	T2	Bay	Multi .5	113	6.0
T	T3	Holly	.15	13	2.00
T	T5	Sycamore	.3	40	3.6
T	T6	Yew	.3	40	3.6

Notes:

Root Protection Area radii are rounded to the nearest 0.5m

Trunk diameters (DBH) are measured at 1.5 metres ('breast height') above ground level, given in centimetres. In the case of multi-stemmed trees (ms) the stem diameter is taken just above the root flare in accordance with BS 5837: 2005.

Appendix C Protective Barriers [BS 5837:2005 Figure 2)

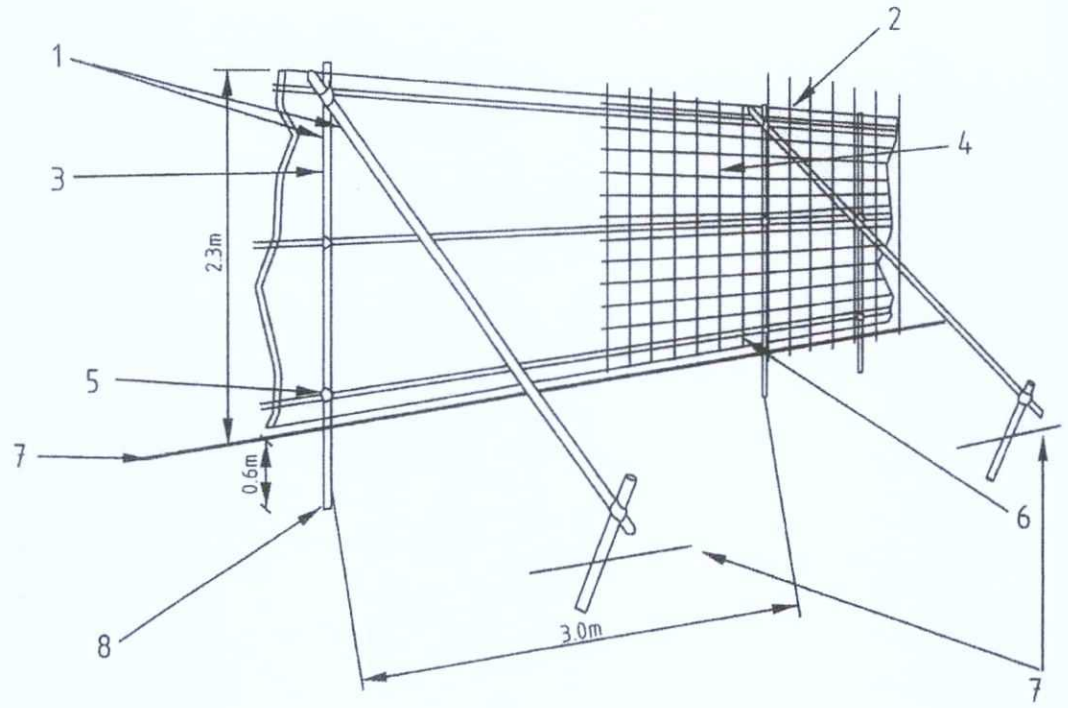

1 Standard scaffold poles
2 Uprights to be driven into the ground
3 Panels secured to uprights with wire ties and where necessary standard scaffold clamps
4 Weldmesh wired to the uprights and horizontals
5 Standard clamps
6 Wire twisted and secured on inside face of fencing to avoid easy dismantling
7 Ground level
8 Approx. 0.6 m driven into the ground

Figure 2 — Protective barrier

Appendix D

Scaffolding within a Root Protection Area [Figure 3, BS 5837: 2005]

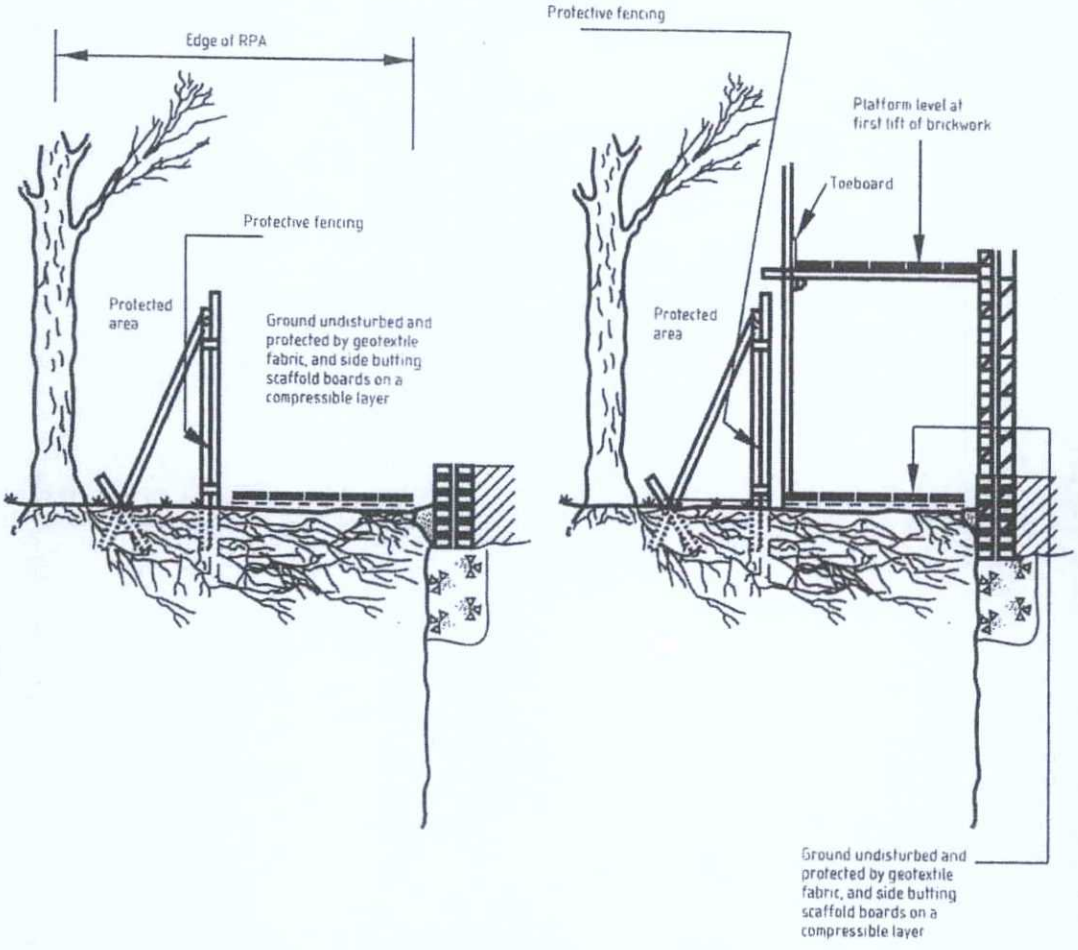

Figure 3 — Scaffolding within the RPA

Appendix E

Method Statement for the removal of hard surfacing and buildings near trees

[RPA refers to the Root Protective Area as specified in the Report, derived from paragraph 5.2.2 of British Standard 5837:2005 'Trees in relation to construction –Recommendations']

1. The uptake of the existing surface and buildings should be carried out from outside the RPA whenever possible and from within the footprint of the existing surfacing or building where this is within the RPA of a tree.

2. The excavation of the material must not extend into the soil underneath. In practical terms the bucket of the excavator must be used so that the cutting edge is horizontal so that any disturbance of the underlying soil is kept to an absolute minimum. The cutting edge of the bucket should be flat and without 'teeth' to further reduce the risk of root damage. Where the surfacing is very thin and/or roots are very near the surface, the digging should be done manually.

3. The rubble must not be stockpiled within the RPA of the tree and must be exported without crossing the RPA.

4. Due care and planning must be taken to ensure that the operational arcs of excavators do not damage the crowns of retained trees.

5. Where new surfacing is to be installed, if the depth of the old surface is insufficient, the wearing surface may need to be higher than existing in order to accommodate the appropriate thickness. There may be a requirement for a geo-textile membrane to be laid on the soil surface, but this is an engineering matter dependent upon soil type. The separation is beneficial for root development.

6. Where the old surface is taken up and not replaced, the infill should be of good quality topsoil laid without compaction.

Appendix F Installation of driveways close to trees using the 'No Dig' method and a cellular confinement system

1. Remove surface vegetation using a systemic herbicide and gather dead organic material. Care must be taken to select (by reading the product label) a herbicide that will not affect the roots of retained trees and vegetation. This must be carried out by an appropriately trained operative.

2. Remove major protrusions such as rocks and stumps (stumps should be ground out to minimise ground disturbance).

3. Any exposed roots should be covered with good quality top soil immediately to prevent them drying out. Any damaged roots should be cut cleanly with a hand saw or secateurs.

4. Fill significant hollows with sharp sand.

5. Install the non woven 'Geotextile' directly on top of the finished soil grade level to provide protection to and separation from the soil level.

6. Lay the three dimensional 'Geogrid' directly onto the soil over the whole of the driveway or parking area.

7. Install kerbs or edgings directly on top of the existing soil grade level. For light structures a treated peg and edging board may be acceptable. For more substantial construction railway sleepers, drilled kerbstones or gabians should be used and held in place with track or road pins.

8. Cover the geogrid with a minimum of 100mm of aggregate (DoT Type1). This should be placed near one end and spread along the geogrid so that machinery only moves on the laid sub-base. The aggregate should not be tipped straight onto the geogrid.

9. Compact the sub-base to ensure binding with the geogrid and to minimise future rutting of the surface.

10. Install temporary surface if necessary

11. Install final surface which should be permeable and gas porous. Where brick paviors are used these should be laid on a dry bed and should not be pointed/grouted.

Diagram of 'no dig' method

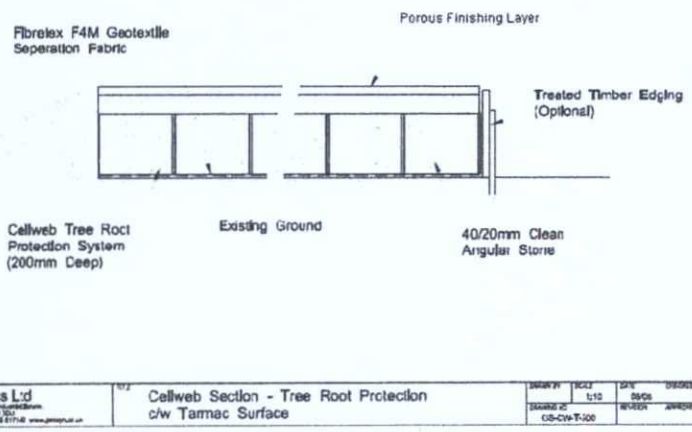

Append

