Tree No.	*Species.*	*Tree Stem Diameter*	*Height Approx*	*Spread Approx*	*Age Approx*	*Condition / Preliminary Recommendations*	*Category*	*Status*
TG 01	*3 No. Chamaecyparis lawsoniana* (Lawson's Cypress) ***Tree Root Protection Area;*** ***Radius: 3,600mm*** ***Area: 41.0 m2***	Single - stemmed #290 mm diameter @ 1.5 m Height	Height approx: 5.0 m Clear Stem Height approx: 0.5 m	Spread Approx. N - 2.0 m E - 2.0 m S - 2.0 m W - 2.0 m	Early Mature 40+ Years Remaining	A group of three number Lawson's Cypress located to the south western corner of the school grounds adjacent to a hard play area. The trees are located within grassland and are healthy specimens overall although there is some die back visible in places. The trees are dense and rounded in habit and there is evidence of Elder establishing itself to the centre of the tree group.	B 1 & 2	**Retain**
SH 02	Mixed Shrub Species Group; • *Cordyline australis;* • *Buddleia sp;* • *Rosa sp;* • *Lonicera sp;* • *Betula sp.*	NA	Height Approx. 1.5 – 3.0 m	Spread Approx. N – 2.0 m E – 2.0 m S – 2.0 m W – 2.0 m	Young to Mature 10 + Years Remaining	A small group of ornamental shrubs located to the main entrance to the school adjacent to Freshbrook Road. The shrubs are an attractive feature and are in good health.	C 2	**Retain**
H03	*Escallonia sp and Photinia sp*	NA	Height approx: 2.5 m	Spread Approx. N - 1.0 m S - 1.0 m	Mature 10+ Years Remaining	Areas of ornamental hedging to the front of School frontage adjacent to Freshbrook Road. The hedging comprises mainly *Escallonia* sp to the frontage with some *Photinia* sp to the edge of some steps. The hedging is well established and an attractive feature.		**Retain**

ADUR & WORTHING
PLANNING SERVICES
PLAN AWDM/ 1017/13
DATE VALID 8/11/13

Tree No.	Species.	Tree Stem Diameter	Height Approx	Spread Approx	Age Approx	Condition / Preliminary Recommendations	Category	Status
T 04	*Fraxinus sp* (Ash Tree) ***Tree Root Protection Area;*** ***Radius: 5,400mm*** ***Area: 92.0 m2***	Multi-stemmed 440 mm (Overall)	Height approx: 8.0 m Clear Stem Height approx: 1.0 m	Spread Approx. N - 3.0 m E - 4.0 m S - 3.0 m W - 3.0 m	Early Mature 40+ Years Remaining	Ornamental Ash Tree which forms part of a tree line which is located to the northern boundary of the school frontage, adjacent to Freshbrook Road. The tree is located at the foot of a grass bank and has a bushy and rounded canopy which is asymmetrical due to hard pruning to the northern (highway) edge. The tree has a clear stem to 1.0m approx where it splits into 4 main boles and is generally in good condition.	B 1 & 2	**Retain**
T 05	*Fraxinus excelsior* (Ash Tree) ***Tree Root Protection Area;*** ***Minimum Radius: 4,200 m*** ***Total Area: 55.0 m2***	Single - stemmed 330 mm (Overall) @ 1.5 m Height	Height approx: 7.0 m Clear Stem Height approx: 1.5 m	Spread Approx. N - 3.0 m E - 3.0 m S - 3.0 m W - 3.0 m	Early Mature 40+ Years Remaining	Ash Tree which forms part of a line of trees to the northern boundary of Seaside School. The tree has a dense and rounded canopy with lateral to ascending habit. The tree is asymmetrical due to hard pruning to the highway side but is an attractive specimen none the less	B 1 & 2	**Retain**
T 06	*Fraxinus sp* (Ash Tree) ***Tree Root Protection Area;*** ***Radius: 5,100mm*** ***Area: 81.0 m2***	Single-stemmed 410 mm (Overall) @ 1.5 m Height	Height approx: 9.0 m Clear Stem Height approx: 2.0 m	Spread Approx. N - 3.0 m E - 4.0 m S - 3.0 m W - 4.0 m	Early Mature 40+ Years Remaining	Ornamental Ash Tree which is part of the tree line which lies adjacent to Freshbrook Road to the northern edge of the School curtilage. The tree lies at the foot of a grass bank and is healthy and well established with a rounded and bushy canopy which is asymmetrical due to pruning to the highway side. It is slightly taller than its neighbours. ***Tree to be removed to accommodate proposed sewer run.***	B 1 & 2	**Remove**

Tree No.	*Species.*	*Tree Stem Diameter*	*Height Approx*	*Spread Approx*	*Age Approx*	*Condition / Preliminary Recommendations*	*Category*	*Status*
T07	*Fraxinus sp* (Ash Tree) ***Tree Root Protection Area;*** ***Radius: 3,600mm*** ***Area: 41.0 m2***	Single-stemmed 280 mm (Overall) @ 1.5 m Height	Height approx: 8.0 m Clear Stem Height approx: 1.5 m	Spread Approx. N - 4.0 m E - 3.0 m S - 4.0 m W - 4.0 m	Early Mature 40+ Years Remaining	This tree has been out competed by its neighbours and is becoming slightly over-shadowed, as a result it is pushing out growth to the north and south. It has a slightly sparse canopy overall and is very asymmetrical. Although not as attractive as its neighbours as part of the tree line to the northern site edge it would be missed were it to be removed. ***Tree to be removed to accommodate proposed manhole and sewer run.***	B 1 & 2	**Remove**
T08	*Populous alba* (White Poplar) ***Tree Root Protection Area;*** ***Radius: 6,900*** ***Area: 150.0 m2***	Single-stemmed 560 mm (Overall) @ 1.5 m Height	Height approx: 10.0 m Clear Stem Height approx : 3.0 m	Spread Approx. N – 4.5 m E – 4.5 m S – 4.5 m W – 4.5 m	Early Mature 40+ Years Remaining	This tree is a large specimen which is rather overshadowing the adjacent trees. Forming part of the tree line to the northern boundary of the school, the dense and distinctive silver canopy is concentrated to the upper part of the tree and is lateral in habit. At the time of visiting a large branch had partly broken off and required removal. There is extensive suckering to the lower part of the trunk and within the grassed area below the canopy. Other than the broken limb the tree is in good health overall. ***(Broken limb to be removed)***	B 1 & 2	**Retain**

Tree No.	Species.	Tree Stem Diameter	Height Approx	Spread Approx	Age Approx	Condition / Preliminary Recommendations	Category	Status
T09	*Pinus sp* (Pine Tree) ***Tree Root Protection Area;*** ***Radius: 5,100*** ***Area: 81.0 m2***	Single-stemmed 410 mm (Overall) @ 1.5 m Height	Height approx: 8.0 m Clear Stem Height approx: 1.5 m	Spread Approx. N – 3.0 m E – 3.0 m S – 3.0 m W – 3.0 m	Early Mature 40+ Years Remaining	An attractive Pine tree which forms part of the tree line to the school boundary adjacent to Freshbrook Road. The tree is an attractive specimen which is overshadowed by the larger and more vigorous T08 (*Populus alba*). The dense and bushy canopy is located to the upper part of the tree and is lateral in habit.	B 1 & 2	**Retain**
T10 and T11	*Crataegus monogyna* (Hawthorn) ***Tree Root Protection Area;*** ***Radius: 1,800*** ***Area: 10.0 m2***	Single-stemmed 150mm (Overall) @ 1.5 m Height	Height approx: 2.5 m Clear Stem Height approx: 1.5 m	Spread Approx. N – 1.0 m E – 2.0 m S – 1.0 m W – 0.5 m	Mature 10+ Years Remaining	Two number Hawthorn trees which are located to the north eastern edge of the school boundary adjacent to Old Salts Farm Road. The trees are very asymmetrical with a distinct lean to the east, possibly due to the exposed nature of the site. T10 is in reasonable health with a small and compact canopy however T11 has very little leaf cover and is predominately composed of bare twigs and branches.	C 1 & 2	**Retain**
T12	*Populus alba* (White poplar) ***Tree Root Protection Area;*** ***Radius: 7,800mm*** ***Area: 191.0 m2***	Multi - stemmed 630mm (Overall)	Height approx: 8.0m Clear Stem Height approx: 1.2 m	Spread Approx. N – 5.0 m E – 6.0 m S – 4.5 m W – 4.5 m	Mature 40+ Years Remaining	This tree is a large specimen and is located to the inside of the school steel link fence line. The dense leaf canopy is concentrated to the upper part of the tree and the habit is generally lateral and descending. There are two main boles; one is dominant whilst the other splits into two. The tree is a distinctive specimen with its combination of green / silver leaves.	B 1 & 2	**Retain**

Tree No.	*Species.*	*Tree Stem Diameter*	*Height Approx*	*Spread Approx*	*Age Approx*	*Condition / Preliminary Recommendations*	*Category*	*Status*
T13	*Fraxinus sp* (Ash Tree) ***Tree Root Protection Area;*** ***Radius: 2,400mm*** ***Area: 18.0 m2***	Single-stemmed 200 mm (Overall) @ 1.5 m Height	Height approx: 4.0m Clear Stem Height approx: 2.0m	Spread Approx. N – 2.5 m E – 2.5 m S – 1.5 m W – 1.5 m	Semi Mature 40+ Years Remaining	An ornamental Ash tree which in common with many of the deciduous trees along this boundary is very asymmetrical - possibly due to the exposed nature of the site and the prevailing winds. The tree has a fairly sparse canopy which leans to the north and east and a clear stem to 2.0m height.	C 1 & 2	**Retain**
T14	*Fraxinus sp* (Ash Tree) ***Tree Root Protection Area;*** ***Radius: 3,000mm*** ***Area: 28.0 m2***	Multi-stemmed 230 mm (Overall)	Height approx: 5.0m Clear Stem Height: 0.5m	Spread Approx. N – 3.0 m E – 3.0 m S – 1.5 m W – 1.5 m	Semi Mature 40+ Years Remaining	The second of two adjacent ornamental ash trees which are located to the eastern boundary of the school, adjacent to Old Salts Farm Road. The tree is again, very asymmetrical with much of its canopy concentrated to the north and the east and generally ascending and lateral overall. The tree has a poor union of 3 main boles which are located 0.5m approx. above ground level. There is evidence of bracket fungi to the base of the tree.	C 1 & 2	**Retain**
T15	*Pinus nigra* (Black Pine) ***Tree Root Protection Area;*** ***Radius: 6,300*** ***Area: 124.0 m2***	Multi-stemmed 520 mm (Overall)	Height approx: 8.0 m Clear Stem Height approx: 1.0 m	Spread Approx. N – 4.0 m E – 4.0 m S – 3.0 m W – 3.0 m	Early Mature 40+ Years Remaining	An attractive Pine tree located to the edge of the eastern school boundary. The tree has a dense and bushy canopy which sits to the upper part of the tree above 4 main boles which diverge at 1.0m approx. above ground level. There is evidence of extensive historical tree work to the lower part of the trunk.	B 1 & 2	**Retain**

Tree No.	*Species.*	*Tree Stem Diameter*	*Height Approx*	*Spread Approx*	*Age Approx*	*Condition / Preliminary Recommendations*	*Category*	*Status*
T16	*Pinus nigra* (Black Pine) ***Tree Root Protection Area;*** ***Radius: 4,800*** ***Area: 172.0 m2***	Single-stemmed 390 mm (Overall) @ 1.5 m Height	Height: 8.0 m Clear Stem Height: 1.5 m	Spread Approx. N – 4.0 m E – 4.0 m S – 4.0 m W – 4.0 m	Early Mature 40+ Years Remaining	This tree lies adjacent to T15 and is also an attractive Pine Tree which is located to the eastern boundary of the school. The tree canopy is dense and rounded with a generally lateral habit.	B 1 & 2	**Retain**
T17	*Fraxinus sp* (Ash Tree) ***Tree Root Protection Area;*** ***Radius: 3,000mm*** ***Area: 28.0 m2***	Multi - stemmed 230 mm (Overall)	Height approx: 5.0 m Clear Stem Height approx: 0.5 m	Spread Approx. N – 3.0 m E – 4.0 m S – 2.0 m W – 2.0 m	Semi Mature 40+ Years Remaining	One of two ornamental ash trees which are located to the eastern school boundary. The canopy is concentrated to the upper part of the tree and is ascending and lateral in habit. The tree has three main boles with a poor union between two of the main branches at 0.5m approx above ground level.	C 1 & 2	**Retain**
T18	*Fraxinus sp* (Ash Tree) ***Tree Root Protection Area;*** ***Radius: 2,100mm*** ***Area: 14.0 m2***	Multi-stemmed 175 mm (Overall)	Height approx: 5.0 m Clear Stem Height approx: 0.5 m	Spread Approx. N – 2.0 m E – 2.0 m S – 1.0 m W – 1.0 m	Semi Mature 40+ Years Remaining	This tree is the second of a pair of ornamental ash trees which lie adjacent to each other to the eastern school boundary. The tree has a fairly sparse canopy which, in common with many of the trees which are located in this area, is asymmetrical. The tree is slightly scrappy in appearance and is the less attractive of the two.	C 1 & 2	**Retain**

Tree No.	Species.	Tree Stem Diameter	Height Approx	Spread Approx	Age Approx	Condition / Preliminary Recommendations	Category	Status
H19	*3 no. Crataegus monogyna* (Hawthorn Hedgerow) ***Tree Root Protection Area;*** ***Radius: 2,100mm*** ***Area: 14.0 m2***	Single-stemmed #160 mm (Overall) @ 1.5 m Height	Height approx: 2.5 m	Spread Approx. N – 1.5 m E – 1.5 m S – 1.5 m W – 1.5 m	Early Mature 20+ Years Remaining	Three Hawthorn trees / shrubs which are located to the eastern boundary of the school playing fields. The trees / shrubs soften and filter views from the south east of the school grounds. The trees / shrubs have dense canopies which extend from ground level and are located at the top of a bank adjacent to Old Salts Farm Road.	C 1 & 2	**Retain**
SH20	*2 No.Crataegus monogyna* (Hawthorn Hedgerow) ***Tree Root Protection Area;*** ***Radius: 2,100mm*** ***Area: 14.0 m2***	Single-stemmed #160 mm (Overall) @ 1.5 m Height	Height approx: 3.5 m	Spread Approx. N – 2.0 m E – 2.0 m S – 2.0 m W – 2.0 m	Early Mature 20+ Years Remaining	Two Hawthorn trees / shrubs which are largely obscured by dense ivy. Whilst some hawthorn foliage is visible the ivy provides a dense visual buffer to the south eastern corner of the school grounds.	C 1 & 2	**Retain**
SH21	Mixed Shrub Species Group; • *Populus alba;* • *Euonymus japonicas.*	Single-stemmed #160 mm (Overall) @ 1.5 m Height	Height approx: 2.5 m	Spread Approx. N – 2.0 m E – 2.0 m S – 2.0 m W – 2.0 m	Young to Mature 20+ Years Remaining	Area of mixed shrubs to the south west corner. The shrubs are dense, bushy and spreading and soften and filter views from the residential buildings to the south east of the open playing fields to the south of Seaside School.	C 1 & 2	**Retain**

Tree No.	Species.	Tree Stem Diameter	Height Approx	Spread Approx	Age Approx	Condition / Preliminary Recommendations	Category	Status
SH22	*Populous alba* (White Poplar)	NA	Height approx: 2.0 m	Spread Approx. N – 1.0 m E – 1.0 m S – 1.0 m W – 1.0 m	Mature 20+ Years Remaining	A small White Poplar which has been recently hard pruned. The shrub is located in an isolated location adjacent to a steel mesh fence line to the southern boundary of seaside School.	C 1 & 2	**Retain**
TL23	*3 No. Populus x Canadensis 'Regenerata* (Railway Poplar) ***Tree Root Protection Area;*** ***Radius: 9,600mm*** ***Area: 290.0 m2***	Single-stemmed #800mm (Overall) @ 1.5 m Height	Height approx: 4.0 m Clear Stem Height approx: 0.5 m	Spread Approx. N – 2.0 m E – 2.0 m S – 2.0 m W – 2.0 m	Mature 40+ Years Remaining	Three number Railway poplars which are located to the southern boundary within an area of tall ruderal vegetation. The trees have been heavily pollarded but are displaying vigorous regeneration with new growth to the top. There is evidence of significant ivy infestation which has been removed. The trees are an attractive feature to the southern boundary.	B 1 & 2	**Retain**
TG24	*2 No. Salix sp* (Willow) ***Tree Root Protection Area;*** ***Radius: 3,900mm*** ***Area: 48.0 m2***	Multi - stemmed # 320mm average (Overall)	Height approx: 6.0 m Clear Stem Height approx: 0.5 m	Spread Approx. N – 3.0 m E – 3.0 m S – 3.0 m W – 3.0 m	Mature 40+ Years Remaining	Two number Willows which are located within an area of tall ruderal vegetation to the southern boundary. The trees are multi – stemmed and have a scrappy but bushy appearance with a generally ascending to lateral habit. The trees are overshadowed by the large Railway Poplar which is located just outside the southern boundary to the south.	B 1 & 2	**Retain**

Tree No.	Species.	Tree Stem Diameter	Height Approx	Spread Approx	Age Approx	Condition / Preliminary Recommendations	Category	Status
T25	*Populus x Canadensis 'Regenerata* (Railway Poplar) ***Tree Root Protection Area;*** ***Radius: 9,600mm*** ***Area: 290.0 m2***	Single-stemmed # 800mm (Overall) @ 1.5 m Height	Height approx: 10.0 m Clear Stem Height approx: 2.0 m	Spread Approx. N – 6.0 m E – 6.0 m S – 4.0 m W – 4.0 m	Mature 40+ Years Remaining	A large Railway Poplar which is located just outside the southern boundary of the school site. The tree is asymmetrical and speading in habit and overshadows and merges with the two willows which are located just to the north. The tree has a single trunk which splits into two boles at 2.0m approx. above ground level. There is heavy ivy infestation to the lower and mid part of the tree.	B 1 & 2	**Retain**
SH26	*Salix sp* (Willow)	NA	Height approx: 3.0 m	Spread Approx. N – 2.0 m E – 2.0 m S – 2.0 m W – 2.0 m	Mature 20+ Years Remaining	A small Willow shrub which is located to a vehicular entrance just outside the southern boundary. The shrub has numerous stems and leans towards the east	C 1 & 2	**Retain**
SH27	*Sambucus nigra* (Elder)	NA	Height approx: 3.5 m	Spread Approx. N – 2.0 m E – 2.0 m S – 2.0 m W – 2.0 m	Mature 20+ Years Remaining	An Elder shrub which is located adjacent to the fence line to the southern boundary. The shrub is healthy and well established with a bushy habit.	C 1 & 2	**Retain**

Tree No.	*Species.*	*Tree Stem Diameter*	*Height Approx*	*Spread Approx*	*Age Approx*	*Condition / Preliminary Recommendations*	*Category*	*Status*
SH28	*Sambucus nigra* (Elder)	NA	Height approx: 2.0 m	Spread Approx. N – 1.5 m E – 1.5 m S – 1.5 m W – 1.5 m	Mature 20+ Years Remaining	A small Elder which is located in an isolated position to the south west corner of the site. The shrub has a dense and bushy habit.	C 1 & 2	**Retain**
SH29	Mixed Boundary Shrub Species Group; • *Sambucus nigra;* • *Ilex sp;* • *Viburnum sp;* • *Euonymus japonicus;* • *Betula sp.*	NA	Height approx: 2.5 m	Spread Approx. 2.5m approx	Mature 20+ Years Remaining	Intermittent boundary vegetation leading to clipped hedgerow of Japanese Spindle. The shrubs soften the eastern boundary fenceline.	C 1 & 2	**Retain**
T30	*2 no. Acer campestre* (Field Maple) ***Tree Root Protection Area;*** ***Radius: 0.9mm*** ***Area: 3.0 m2***	Single-stemmed 140mm (Overall) @ 1.5 m Height	Height approx: 4.0 m Clear Stem Height approx: 2.0 m	Spread Approx. N – 0.5 m E – 0.5 m S – 0.5 m W – 0.5 m	Mature 40+ Years Remaining	Two number Field Maple standards which are located to the south of the existing school extension. The trees are in a very poor condition with little sign of life and are therefore recommended for removal.	U	**Remove**

Tree No.	Species.	Tree Stem Diameter	Height Approx	Spread Approx	Age Approx	Condition / Preliminary Recommendations	Category	Status

CATEGORY DIVISION

Category U - *Trees not for retention within the context of existing land use;*

- Trees that are unviable due to serious, irremediable structural defect; early loss is expected due to collapse;
- Trees that are dead or showing signs of significant, immediate, irreversible decline;
- Trees infected with pathogens of significance to health and subsequent safety, and threat thereof to trees nearby;
- Trees of very low quality suppressing the development of those of greater quality;
- Trees that will become unviable after the removal of other trees for reasons above.

Category A - *Trees whose retention is most desirable to include; trees of high quality having an estimated longevity of over 40 years;*

- Trees that are particularly good examples of their species;
- Trees forming essential components of groups; or are of visual importance to the locality;
- Trees of significant historical, commemorative or other value, or good specimens of rare or unusual species.

Category B -*Trees where retention is desirable to include; trees of moderate quality having an estimated longevity of over 20 years;*

- Trees that might be included in the higher category, but because of significant impaired but remediable condition are downgraded;
- Trees present in numbers offering a higher collective categorisation than as individually rated; trees occurring in groups but due to situation, offering little contribution l the context of the wider locality;
- Trees having some material conservation or cultural value.

Category C - *Trees of low quality having an estimated longevity of over 10 years;*

- Trees in adequate or impaired condition, or those which can be retained with minimal tree surgery, but not worthy for inclusion in the high or moderate category;
- Immature trees *(less than 150mm stem diameter)*, or mature trees of no particular merit or cultural value.
- Trees present in numbers without having significant landscape value.

BS 5837 - 2012: 'Trees in Relation to Design, Demolition and Construction - Recommendations'

Tree No.	*Species.*	*Tree Stem Diameter*	*Height Approx*	*Spread Approx*	*Age Approx*	*Condition / Preliminary Recommendations*	*Category*	*Status*

Figure 01. Tree Protective Fencing. Default specification for protective barrier
(© The British Standards Institution 2012)

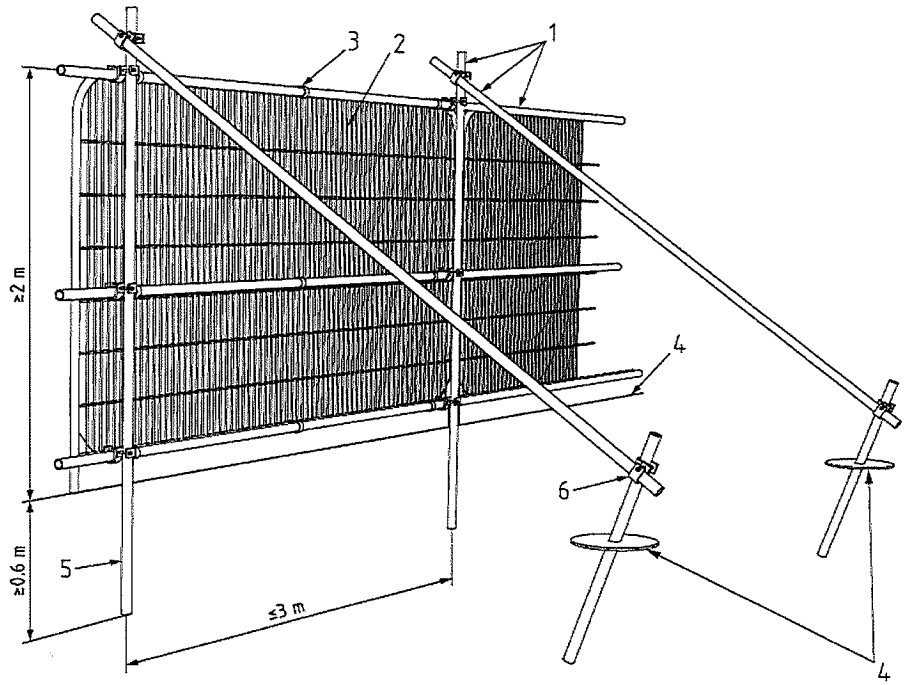

Key

1 Standard scaffold poles
2 Heavy gauge 2 m tall galvanized tube and welded mesh infill panels
3 Panels secured to uprights and cross-members with wire ties
4 Ground level
5 Uprights driven into the ground until secure (minimum depth 0.6 m)
6 Standard scaffold clamps

Tree No.	Species.	Tree Stem Diameter	Height Approx	Spread Approx	Age Approx	Condition / Preliminary Recommendations	Category	Status

Figure 02. Tree Protective Fencing Support - Alternative support specification for protective barrier.
(© The British Standards Institution 2012

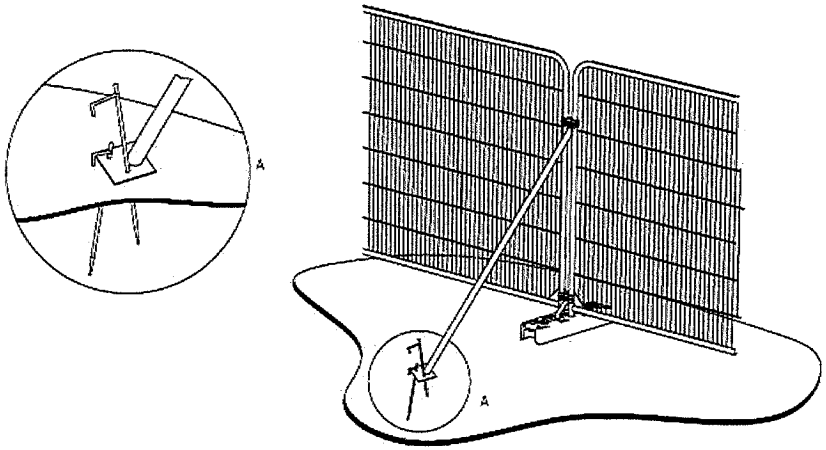

a) Stabilizer strut with base plate secured with ground pins

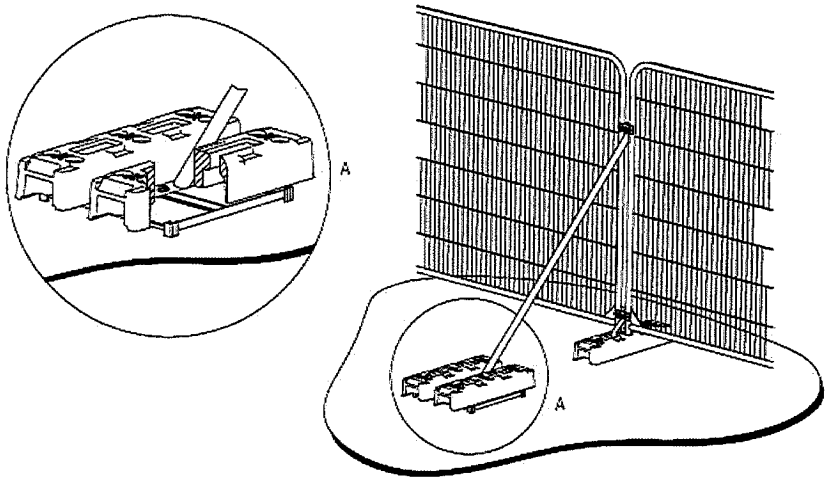

b) Stabilizer strut mounted on block tray

