

DETAIL 'A'
(NTS)

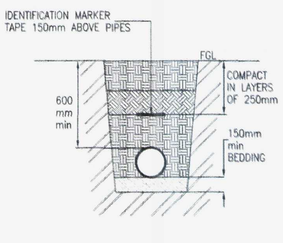

DETAIL 'B'
(NTS)

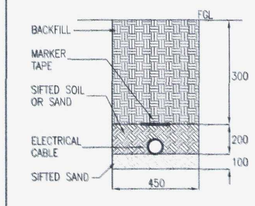

DETAIL 'C'
(NTS)

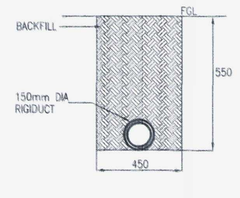

DETAIL 'D'
(NTS)

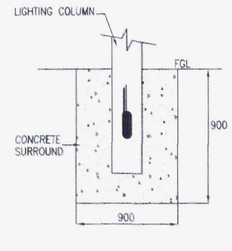

DETAIL 'E'
(NTS)

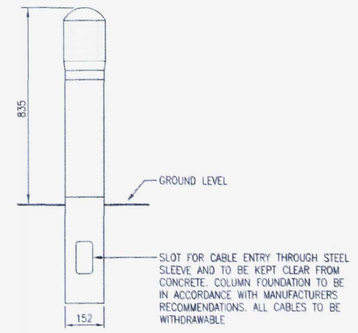

TYPICAL MOUNTING DETAIL FOR LIGHTING BOLLARD
(NTS)

NOTES

1. THIS DRAWING TO BE READ IN CONJUNCTION WITH DRAWING NUMBERS P3954/M103 & E303.
2. ALL WATER SERVICES SHALL BE INSTALLED IN ACCORDANCE WITH THE WATER SUPPLY (WATER FITTINGS) REGULATIONS 1999.
3. ALL BOLLARD POSITION AND CABLE/DUCT ROUTES TO BE AGREED WITH CONTRACT ADMINISTRATOR PRIOR TO WORK COMMENCING.
4. ALL EXTERNAL LIGHTING UNDERGROUND CABLES INSTALLED UNDER HARD STANDING AREAS TO BE INSTALLED IN 150mm DIA RIGIDUCT REFER TO DETAIL 'D'.
5. REFER TO PREMIER ENERGY SURVEYS DRAWING NUMBER PES-289110-001 TITLED "UTILITY IDENTIFICATION SURVEY" FOR DETAILS OF EXISTING UNDERGROUND INCOMING SERVICES.
6. LIGHTING BOLLARDS CONTROL
   THE LIGHTING BOLLARDS ARE CONTROLLED VIA THREE CONTACTORS AND ASSOCIATE TIME CLOCKS/PHOTOCELL AS FOLLOWS.

   CIRCUIT 1 BOLLARD No.1 TO 5 INCLUSIVE OPERATE DURING THE HOURS OF DARKNESS.

   CIRCUIT 2 BOLLARD No.13 TO 18 INCLUSIVE OPERATE DURING THE HOURS OF DARKNESS.

   CIRCUIT 3 BOLLARD No.6 TO 12 INCLUSIVE NOT OPERATED BETWEEN 10pm AND 7am.
7. LIGHTING BOLLARDS REFERENCE No's 13 & 14 SHALL BE PROVIDED WITH REAR SHIELDS TO REDUCE LIGHT SPILL

T.P. OFFICE COPY

BOROUGH OF WORTHING
DEPOSITED 4/4/11
TP REF No.
WB/ 11/0247/LBC

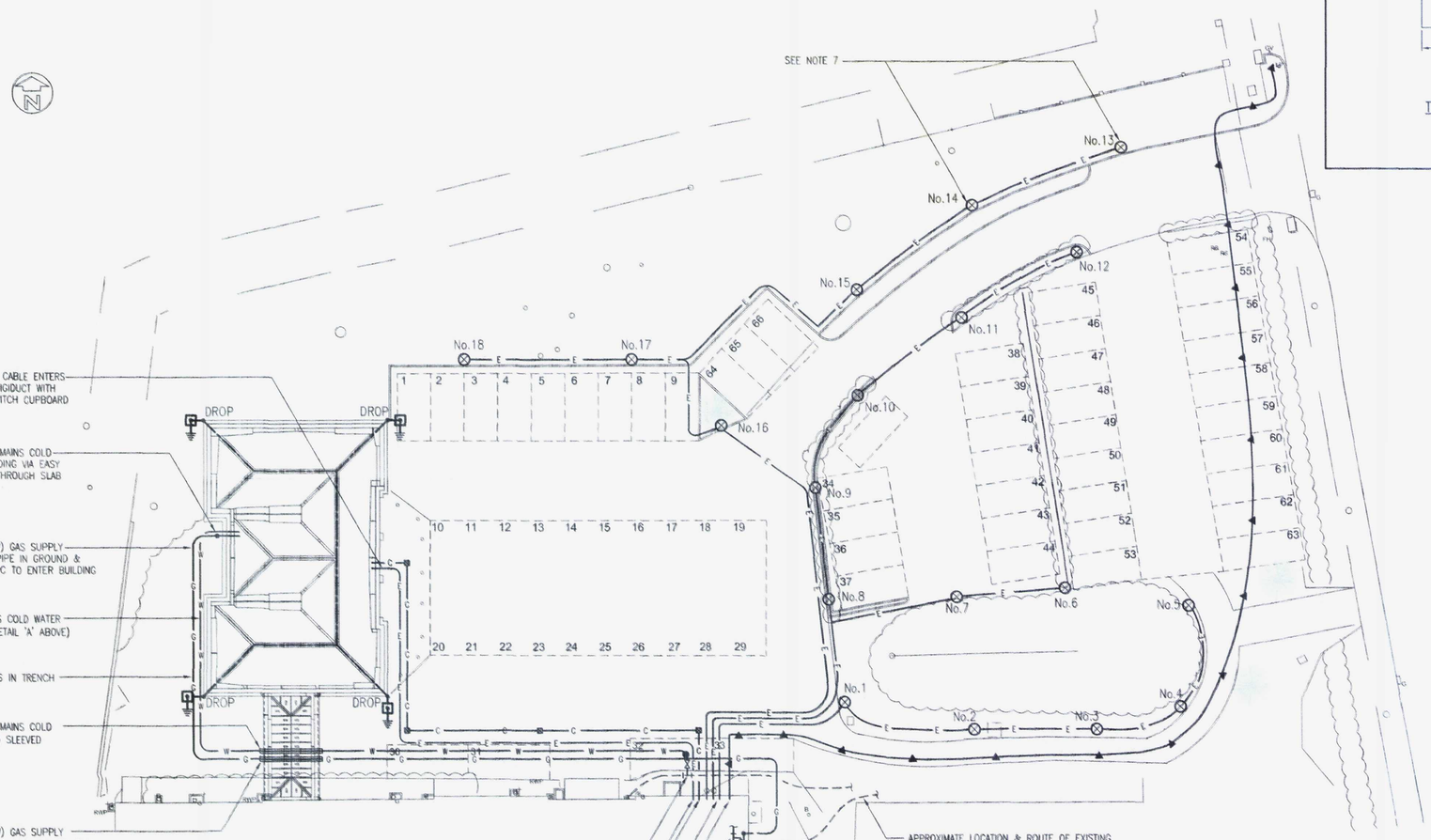

LEGEND

- LIGHTNING PROTECTION EARTH LEADS OF 25 x 3mm SOLID COPPER TAPE PVC COVERED CONNECTED TO TEST CLAMP WITH TAPE ROUTED EXTERNALLY DOWN INTO GROUND AT A DEPTH OF 600mm BELOW GROUND TO ELECTRODE POSITION 1m FROM BUILDING (ELECTRODE TO BE 2.4m DRIVEN INTO GROUND)
- LIGHTNING PROTECTION DOWN CONDUCTORS 25 x 3mm ALUMINIUM OR COPPER TAPE PVC COVERED CONNECTED TO ROOF RIDGE CONNECTORS AND ROUTED DOWN TO 500mm ABOVE GROUND TO TERMINATE IN TEST CLAMP
- ROUTE OF ROOF LIGHTNING PROTECTION CONDUCTORS 25 x 3mm ALUMINIUM OR COPPER TAPE PVC COVERED. FINAL ROUTE TO BE AGREED WITH CONTRACT ADMINISTRATOR
- EXISTING SERVICE ROUTES
- W — MAINS COLD WATER SERVICE IN TRENCH
- G — GAS SUPPLY IN TRENCH
- E — ELECTRICAL SUB-MAIN CABLE IN TRENCH REFER TO DETAIL 'C'
- C — DUCT FOR COMMUNICATION CABLES
- 450x450mm ACCESS PIT/COVER FOR COMMUNICATION CABLE
- INDICATE 835mm HIGH LIGHTING BOLLARD (N DENOTES REFERENCE NUMBER)
- PROPOSED ROUTE OF NEW INCOMING ELECTRICAL SUPPLY AUTHORITIES CABLE

Rev.	Date	Revisions
B	16.02.11	NOTES ADDED RE : BOLLARD No's 13 & 14
A	JUNE 2010	EXTERNAL LIGHTING ALTERED TO SUIT COMMENTS FROM PLANNING AUTHORITY

Consultant
Browning & Hussey Partnership
Building Services & Environmental Engineering Consultants
1 Kings Court
Harwood Road
Horsham, West Sussex
RH13 5UR
Tel: 01403 264447 Fax: 01403 264698

Client
BOND INTERNATIONAL SOFTWARE PLC

Job Title
BUILDING EXTENSION COURTLANDS
PARKLANDS AVENUE
GORING-BY-SEA
WORTHING WEST SUSSEX

Drawing Title
SITE PLAN
PROPOSED MECHANICAL & ELECTRICAL SERVICES LAYOUT

Scale 1 : 200 @ A1

Date SEPT 2009 | Drawn by TMH/KMB

Drg No. P3954/ME401 | Rev. B

TENDER DRAWING