General Notes:

Do not scale dimensions from this drawing, unless for Planning purposes.

The Contractor is responsible for checking all dimensions on site prior to commencement of the works.

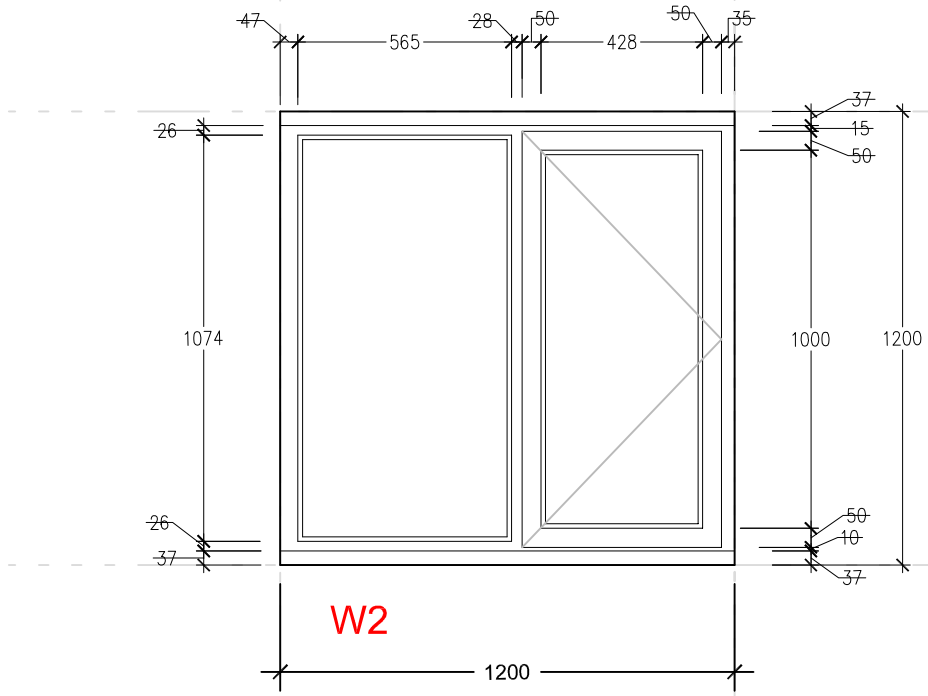

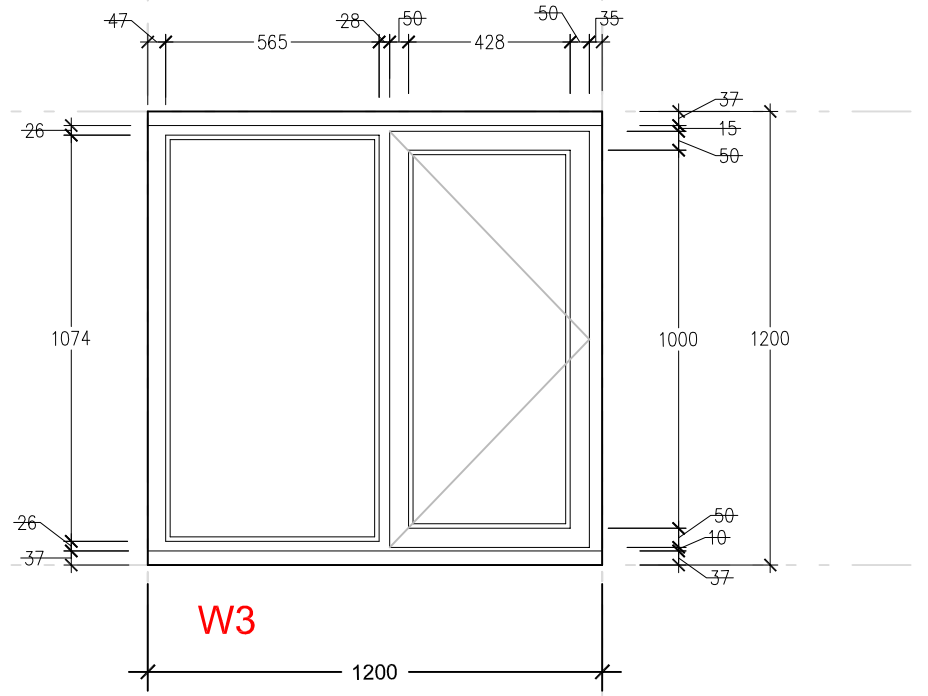

EXISTING WINDOWS:
TIMBER - STAINED BROWN

Brian Elstone Surveying Services Ltd
Brian Elstone, MCIOB, IMaPS, MCABE
Building Surveyor and Architectural Consultant
CDM Consultant

1 Herne Court, Station Road, Rustington,
West Sussex, BN16 3BQ
Phone: 01903 784884, Mobile: 07710 593021.
Email: brian@elstone.biz

Client:
Mrs S. Malcolmson, 14 Oaklands Court, Goring Street, Goring by Sea, BN12 5AR

Project:
Window Replacement

Drawing Title:
Existing Timber Windows. Sheet 2

Revision	Date	Description

Scale:	Date:	Drawn By:
1:20	13/07/2023	BE

Drawing Number:	Revision:
1599/003	-