General Notes:

Do not scale dimensions from this drawing, unless for Planning purposes.

The Contractor is responsible for checking all dimensions on site prior to commencement of the works.

All Dimensions as for window Number W1.

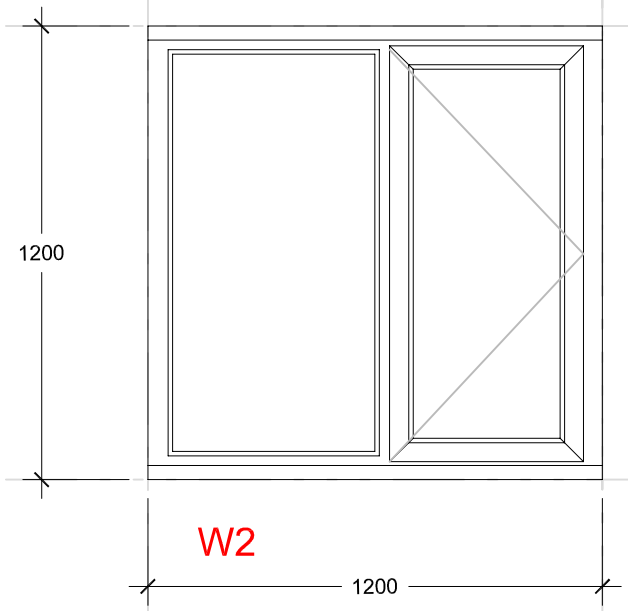

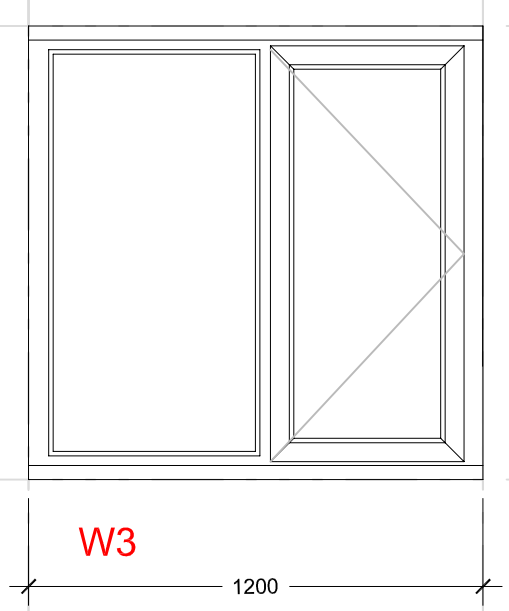

Proposed windows, PVC Rosewood externally, white internally.

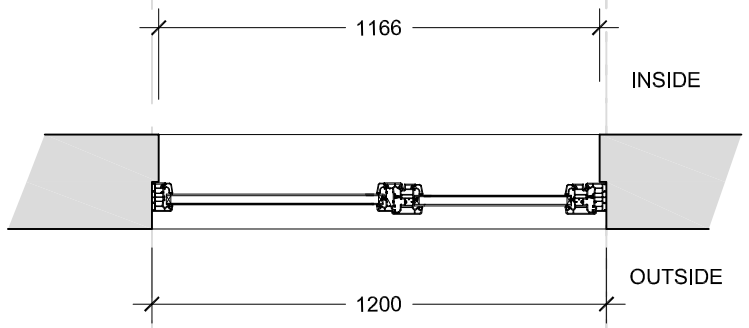

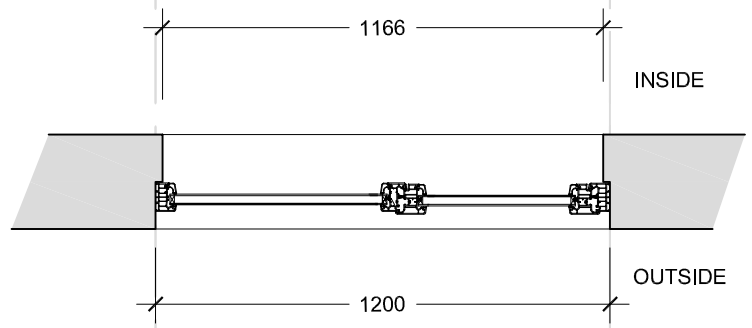

Brian Elstone Surveying Services Ltd
Brian Elstone, MCIOB, IMaPS, FCABE
Building Surveyor and Architectural Consultant
CDM Consultant
1 Herne Court, Station Road, Rustington,
West Sussex, BN16 3BQ
Phone: 01903 784884, Mobile: 07710 593021.
Email: brian@elstone.biz

Client:
Mrs S Malcolmson, 14 Oaklands Court, Goring Street, Goring by Sea, BN12 5AR

Project:
Window Replacement

Drawing Title:
Proposed PVC Windows.

Revision	Date	Description

Scale:	Date:	Drawn By:
1:20	13/07/2023	BE

Drawing Number:	Revision:
1599/005	-