Status A - No Comments



NOTE: This drawing is the copyright of UBU Design LTD, all rights reserved.

Do not scale from this drawing, except for planning purposes only. All dimensions/levels to be checked. UBU Design LTD accept no liability for any expense loss or damage of whatsoever nature and however arising from any variation made to this drawing or in the execution of the work to which it relates which has not been referred to them and their prior approval obtained.

LEGEND

- Existing tree / vegetation to be retained (as shown on survey)
- Proposed tree 20-25cm
- Proposed planting
- Existing planting to be maintained
- Proposed HB2 kerbs
- Existing HB2 kerbs to be retained
- Existing HB2 kerbs to be removed

General landscaping
Existing levels to be preserved around retained existing trees and vegetation. Existing trees and vegetation to be retained are to be protected in accordance with BS5837 during construction. All landscape works to be undertaken by competent persons, with appropriate training and equipment.

Services
The contractor must ascertain for themselves the exact location of underground services before commencing work.

Topsoil
Topsoil to be handled (i.e. excavated and/or imported, stored, spread, cultivated) in accordance with method agreed in writing by Landscape Architect prior to work commencing. Amelioration to be as determined by analysis. If poor drainage is suspected in existing soil surfaces, these should be broken up prior to planting, turfing and seeding to a depth of 300mm to remove likelihood of compaction and damage to new planting and turf. Where topsoil is to be imported, soil medium parameters to be within the following:

Soil texture:	sand	20-75%
	silt	5-60%
	clay	5-30%
Maximum stone size in any direction:		50mm
pH:		5.5 - 7.8
Electrical conductivity:		100-900 uS/ cm
Organic matter:		> 4%
Nitrogen:		> 0.2%
Phosphorous:		> 26 mg/l
Potassium:		> 240 mg/l
Magnesium:		>50 mg/l

Imported topsoil to be a good quality loam to BS 3882 or manufactured topsoil. All topsoil areas shall be thoroughly cultivated by hand or suitable machinery to the full depth of the topsoil layer, incorporating ameliorants as specified and/or as indicated by analysis and in accordance with BS 3882. Hand cultivations shall be carried out to achieve the required finish on areas where machine cultivation is impossible ie adjacent to kerbs, manholes and footpath junctions etc. Surplus plant matter, rubbish and surface stones having any dimension greater than 25 mm shall be collected and removed from the site. Existing topsoil to be stripped and re-used if suitable as per specification. Topsoil is to be stored in heaps, maximum of 4m in height, providing soil is reasonably dry and friable during stripping and handling - using a tracked excavator. To protect from wet weather once final height is achieved, an excavator should regrade the sides and top of stockpile to a firm surface.

Fertilizer/Compost
Approved (peat free) composts to PAS100 and fertilizers to be added during cultivation as required to full depth of growing medium.

Plant Handling
Plant handling at the nursery, and during transit up to delivery, shall be in accordance with 'Plant Handling', the booklet published by the Committee for Plant Supply and Establishment (CPSE). The contractor shall comply with clauses 3 & 4 of the above booklet (obtained from the Horticulture Trades Association, 19 High Street, Theale, Reading, Berks RG7 5H) which refers to the receipt, unloading and temporary storage of plants. General plant stock to conform to BS 3936, advanced nursery stock to BS 5236, BS 8545, and planting to BS 4428. Plants shall be first class examples of their species or variety, free from all pests and diseases, with good fibrous root systems and materially undamaged (refer to relevant sections of BS3936 Parts 1-4 'Specification of Nursery Stock'). All planting operations to be in general compliance with BS4428: 1989 'Code of Practice for general landscape operations (excluding hard surfaces)'. Carry out all planting while soil and weather conditions are suitable:

- Do not plant during periods of frost or strong winds. Plant only during the following periods
- Deciduous and conifer trees: Late October to late March
- Container grown plants: At any time if ground and weather conditions are favourable. Ensure that adequate watering and weed control is provided
- Bulbs : September/October

Setting-out of planting beds to be approved by Landscape Architect before work commences. Ensure that plant beds are neatly defined, and rise from adjacent paved areas. All ornamental planting areas to be mulched with 75mm (settled depth) bark mulch. Sample of mulch to be approved by Landscape Architect. Topsoil depth to be 300mm for planting and 150mm for grass.

Trees
Trees shown on plan to be planted with species as labelled or similar approved. All trees to be planted in pits 1m x 1m x 0.9m deep backfilled with 500mm depth 80% clean topsoil and 20% approved green compost to PAS100 and 100 gms granular fertilizer, over 400mm washed medium coarse grade sand bed to base of pit. Water-in heavily after planting and surface mulched 75mm depth. Unless noted above as requiring underground guying, all trees to be double staked and tied and multi stems diagonal single stake. Sample of staking for each species to be approved. Any necessary tree works are to be carried out by an approved tree surgeon to BS 3998. Trees planted in grass lawn to be set in bare earth circles, 1m diameter around tree trunk, with turf trimmed neatly to form circle, and earth mulched with approved bark mulch to 75mm depth after planting.

Shrub Herbaceous & Ground Cover Planting
All plants to be planted in cultivated planting beds at densities shown in plant schedule, in pits of min. size 0.3m x 0.3m x 0.3m deep so as to accommodate full root spread, backfilled with 80% clean topsoil and 20% approved green compost to PAS100 and 20 gms granular fertilizer. All shrub beds to be in min. 300mm good quality, well prepared topsoil and to be mulched with 75mm depth approved bark mulch after planting.

Maintenance
Establishment maintenance for all planting for 5 years from Practical Completion (first year to be carried out by installing contractor) to include weed control, watering and replacement of failures to original specification in the planting season following failure. All plant material to receive annual pruning and groundcover to be trained and edged with minimum 2 trims per year. Mowing is to be carried out using approved machinery to maintain the vegetation length within the limits of 30 mm and 50 mm during April to August inclusive and between 50 mm and 70 mm during the rest of the year.

Stock	Quantity	Item	Size	Height (cm)	Notes	Pot Type	Density/m2
Trees			12-14 Girth	350-425	5 breaks 3x standard (heavy) clear stem 175-200	Rootball	Counted
	1	Alnus glutinosa	12-14 Girth	350-425	5 breaks 3x standard (heavy) clear stem 175-200	Rootball	Counted
	1	Carpinus betulus 'Frans Fontaine'	12-14 Girth	350-425	5 breaks 3x standard (heavy) clear stem 175-200	Rootball	Counted
	2	Ginkgo biloba	12-14 Girth	350-425	5 breaks 3x standard (heavy) clear stem 175-200	Rootball	Counted
	2	Liquidamber styraciflua Worplesdon	12-14 Girth	350-425	5 breaks 3x standard (heavy) clear stem 175-200	Rootball	Counted
	1	Liriodendron tulipifera 'Aureomarginata'	12-14 Girth	350-425	5 breaks 3x standard (heavy) clear stem 175-200	Rootball	Counted
	1	Pyrus x calleryana 'Chanticleer'	12-14 Girth	350-425	5 breaks 3x standard (heavy) clear stem 175-200	Rootball	Counted
	1	Sorbus aria	12-14 Girth	350-425	5 breaks 3x standard (heavy) clear stem 175-200	Rootball	Counted
	9						
Shrubs							
	41	Cornus sanguinea 'Mid Winter Fire'	3L			Container	3/m2
	40	Cornus sericea 'Flaviramea'	3L	40-60	Branched, min. 2 break	Container	3/m2
	27	Mahonia aquifolium 'Apollo'	3L	30-40	Branched min. 3 breaks	Container	3/m2
	65	Osmanthus burkwoodii	3L			Container	3/m2
	31	Potentilla fruticosa 'Longacre'	3L	15-20	Bushy, min. 3 breaks	Container	3/m2
	33	Rosmarinus officinalis 'Prostratus'	3L			Container	3/m2
	23	Sarcococca hookeriana var. humilis	3L	30-40	Bushy, min. 3 breaks	Container	3/m2
	24	Spiraea japonica 'Firelight'	3L	40-60	Branched, min 4 breaks	Container	3/m2
	49	Spiraea nipponica 'Snowmound'	3L	40-60	Branched, min 4 breaks	Container	3/m2
	23	Symphoricarpos x chenaultii 'Hancock'	3L	40-60	Branched, min. 3 breaks	Container	3/m2
	21	Viburnum davidii	3L	20-30	Bushy, min. 2 breaks	Container	3/m2
	377						
Herbaceous							
	37	Artemisia 'Powis Castle'	2L			Container	5/m2
	39	Bergenia 'Silberlicht'	2L			Container	5/m2
	43	Anemone hupehensis 'September Charm'	2L			Container	5/m2
	45	Geranium 'Johnson's Blue'	2L			Container	5/m2
	39	Salvia officinalis 'Purpurascens'	2L			Container	5/m2
	41	Stachys byzantina	2L			Container	5/m2
	244						

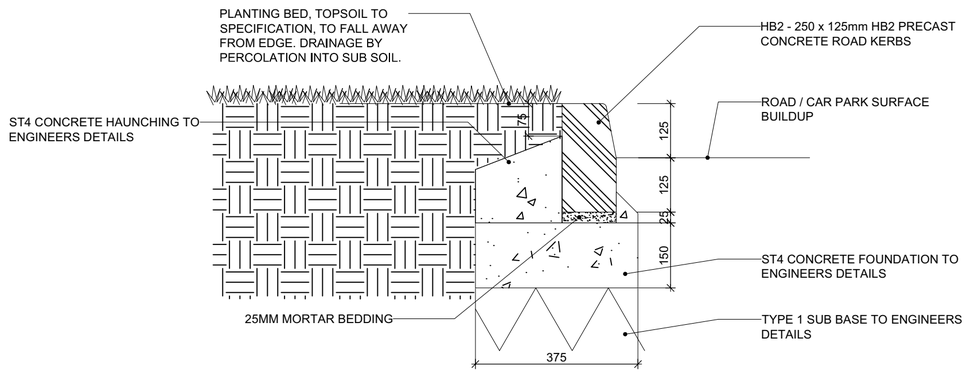

TYPICAL 125x250 HALF BATTER KERB DETAIL
SCALE 1:10

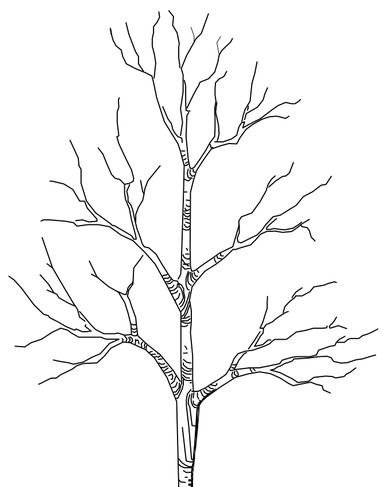

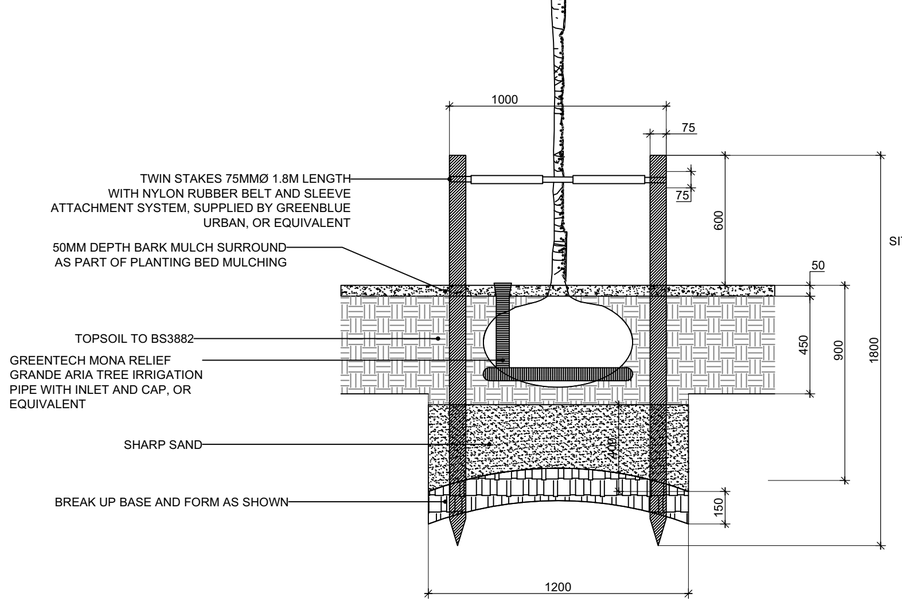

SECTION A-A THROUGH TREE IN SOFT LANDSCAPE
SCALE 1:20

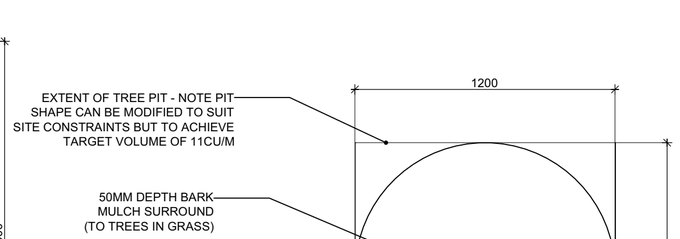

DETAIL PLAN OF TREE IN SOFT LANDSCAPE
SCALE 1:20

REV	DATE	COMMENTS	DRN	CHK	APP
C02	09/02/24	Tree pit detail and dimensions added and clarification made on schedule	MLA	MJ	

UBU Design LTD
7a Wintex House, Easton Lane
Business Park, Easton Lane,
Winchester, Hants, SO23 7RQ
+44 (0) 1962 856 008
studio@ubu-design.co.uk
www.ubu-design.co.uk

PROJECT:	LIVERPOOL GARDENS
TITLE:	PLANTING PLAN
CLIENT:	GALLIFORD TRY
SCALE: 1:200@A1	DATE: 22/01/2024
JOB NO: 1728	DWG NO: WICC-UBU-XX-XX-DR-L-3010
STATUS: A5	REV: C02

Status A - No Comments