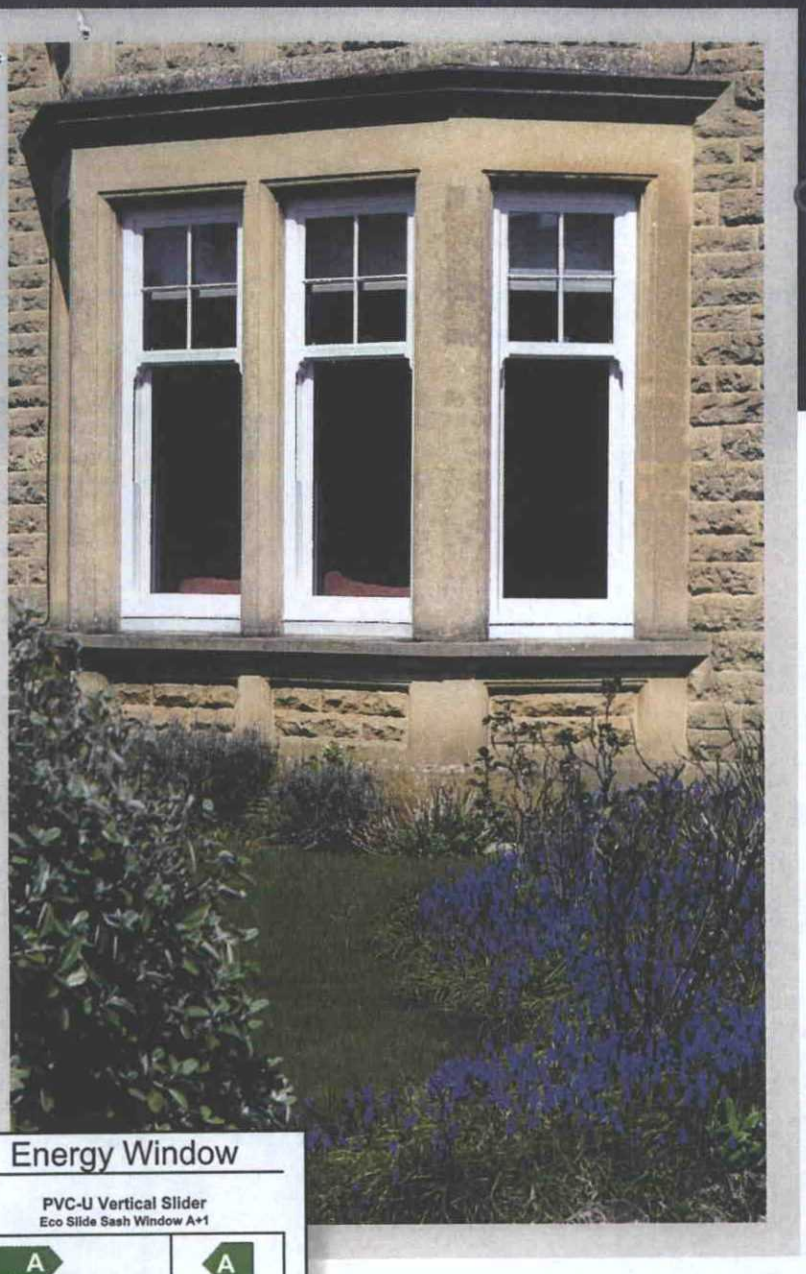

The New Standard in uPVC Sash Windows

CE Marked

Toughened Glass FREE As Standard

A Rated FREE As Standard

A Rated
FREE AS STANDARD

Toughened Glass
FREE AS STANDARD

Decorative Sash Horns
FREE AS STANDARD

Travel Restrictors
FREE AS STANDARD

Full Range of
Colours & Renolit Foils

Fully Featured
Sculptured Profiles

Georgian & Astragal
Bar Options

Energy Window

PVC-U Vertical Slider
Eco Slide Sash Window A+1

A–G scale	A
Energy Index (kWh/m²/year) (Energy Index certified by BFRC and based on UK standard window. The actual energy consumption for a specific application will depend on the building, the local climate and the indoor temperature)	1
The climate zone is:	UK
Thermal Transmittance (U_{window})	1.5 W/m².K
Solar Factor (g_{window})	0.49
Effective Air Leakage (L_{factor})	0.00 W/m².K

Reg. No.: 4365 M365
www.bfrc.org

This label is not a statutory requirement. It is a voluntary label provided as a customer service to allow consumers to make informed decisions on the energy performance of competing products.

A Rated
FREE As Standard

ADUR & WORTHING
PLANNING SERVICES

PLAN	AWDM/1810/17
DATE VALID	22 NOV 2017

1st CHOICE

PREMIER WINDOWS
Doors & Conservatories

Unit 4, Southern Cross Industrial Estate, Freemans Road, Portslade, Brighton, East Sussex, BN41 1GS

Tel: 01273 889900

EcoSlide
Styles & Options

EcoSlide uPVC sash windows are available in a variety of styles and hardware options. An extensive range of Georgian and Astragal bars will satisfy most custom requirements. Sash horns help replicate the original timber sashes and are fitted free as standard, if required.

Transom drops can be specified to any custom measurement e.g 60/40, 70/30 in addition to the natural 50/50 split. EcoSlide windows can also be specified coupled together, in splay bays and 90 degree bays, with factory fitted bay poles and capping.



Travel Restrictors
Fitted as standard if Specified



Tilt Knobs
2 Tilt knobs fitted as standard on each window



Sash Lifts
2 Sash lifts fitted as standard on each window





Sash Horns
Fitted as standard if required





Pole Eyes
2 Pole eyes fitted as standard



Sash Locks
1 fitted to windows up to 799mm wide. 2 fitted on windows 800mm & over



D Handles
(Not illustrated)

Colour & Foil Options

EcoSlide uPVC sash windows are available in a variety of colour options. We have 2 solid profile colour options, white and cream, 4 Renolit foil inside and outside options and 6 Renolit foil outside and white inside options.

Solid Colours

White

Cream

Foil Inside & Outside

Crystal White Ash
9294 05 - 117900

Cream
1379 05-116700



Golden Oak
9.2178 001-116700



Irish Oak
9.3211 005-114800

Foil Outside & White Inside



Chartwell Green
49246-101100



Rosewood
9.3202 001-116700



Black Brown
8518 05-116700

Cream
1379 05-116700



Golden Oak
9.2178 001-116700



Irish Oak
9.3211 005-114800

Special Orders: We can also spray to any RAL colour, and foil to any other Renolit specification. Longer lead times will apply.

Designed, Extruded & Fabricated In The UK - Specifically For the UK Climate



EcoSlide uPVC sash windows are designed, extruded and fabricated in the UK specifically for the UK climate. Our production facilities have the capacity to manufacture over 1500 sash windows a week, Since production of Ecoslide sash windows began in 2009, nearly 100,000 sash windows have already been installed across Britain.

Every Ecoslide uPVC sash window is manufactured at our purpose designed state of the art factory in Swansea, South Wales, to fit and perform flawlessly.

Our profile is extruded in our own UK factory from a 100% virgin, lead free compound. The bright white high gloss profile is manufactured in accordance with current British quality standards.

EcoSlide Profile Sections

Horizontal Section Through Top Sash

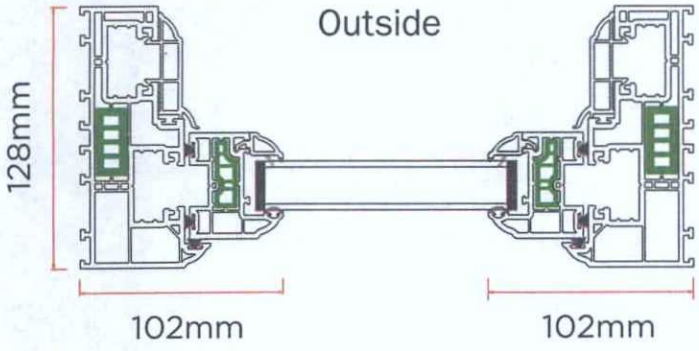

Horizontal Section Through Bottom Sash

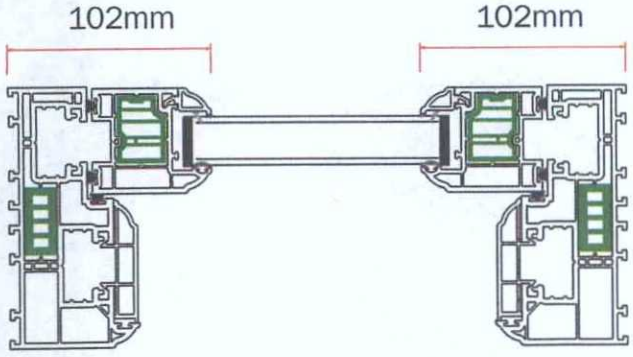

Vertical Section Through Sash

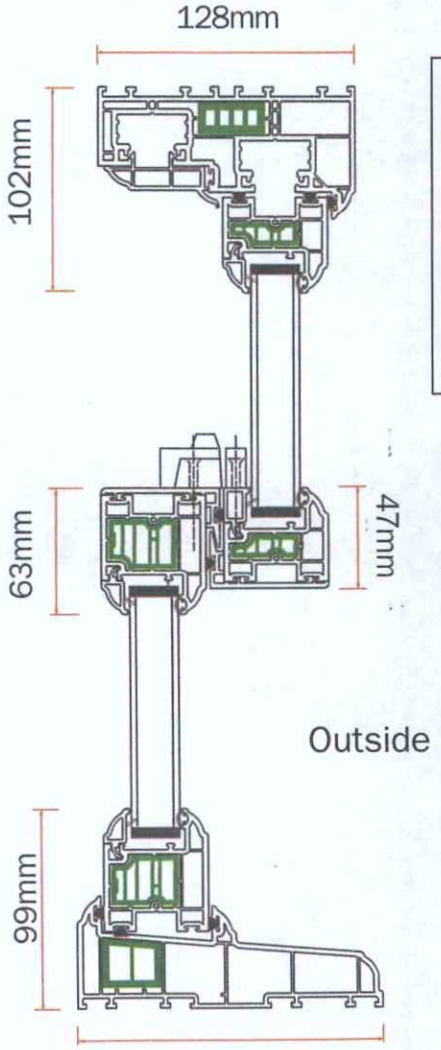

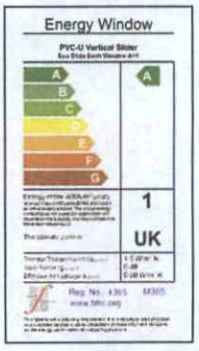

*Cill Options
152mm
185mm
225mm

CE

Thermal inserts (coloured green) manufactured from 100% recycled uPVC