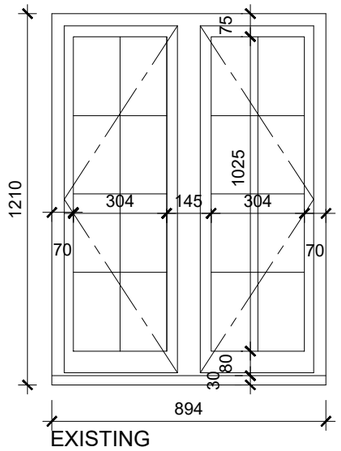

EXISTING

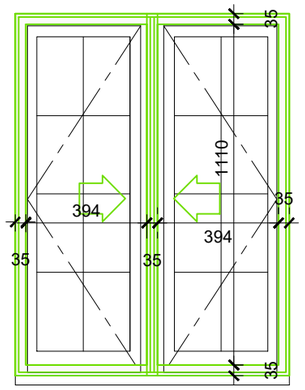

PROPOSED

W21

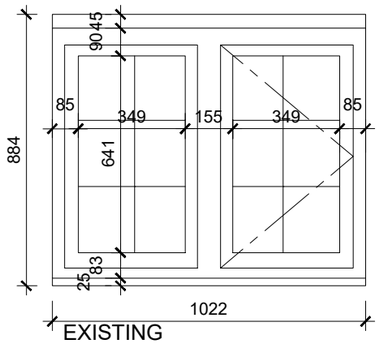

EXISTING

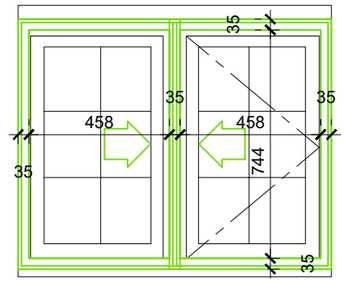

PROPOSED

W17

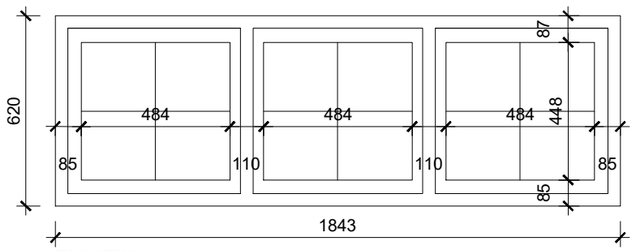

EXISTING

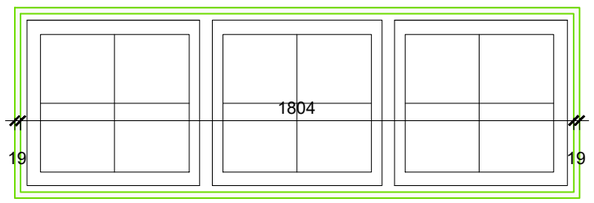

PROPOSED

W2

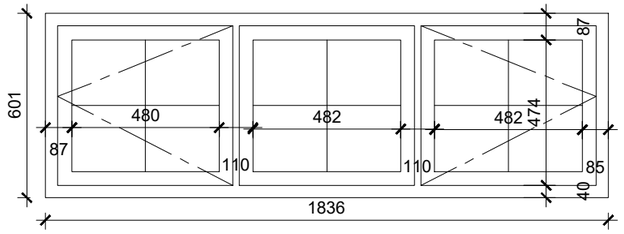

EXISTING

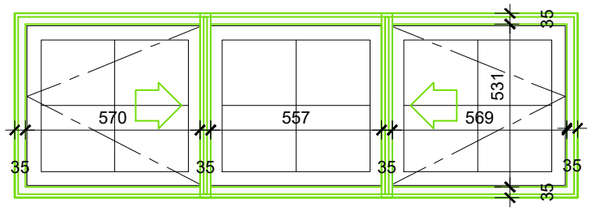

PROPOSED

W3

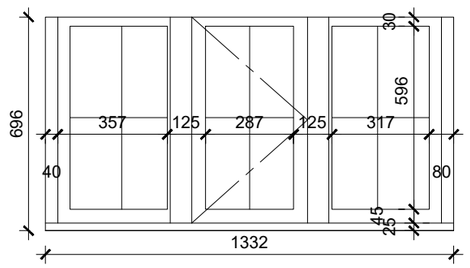

EXISTING

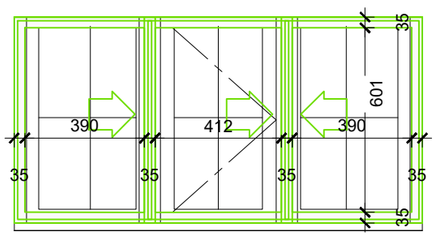

PROPOSED

W22

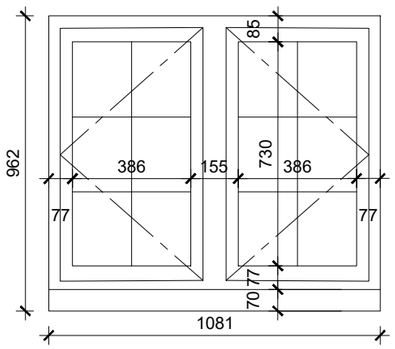

EXISTING

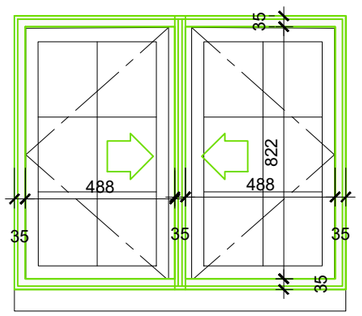

PROPOSED

W4

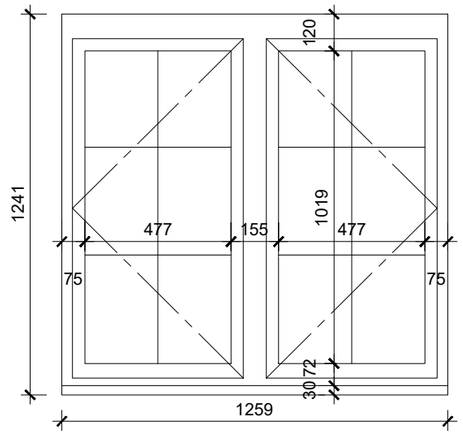

EXISTING

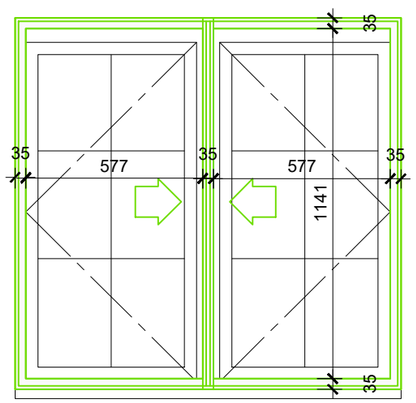

PROPOSED

W5

1:20 @ A3

mm 200 400 600 800

PROJECT:	No.15 Mill Road, Grants Manor
DRAWING TITLE:	EXTERNAL WINDOWS - SECONDARY GLAZING
DRAWING NUMBER:	PL 003 Revision: A

KEY

New Secondary Glazing

NOTES:
Powder Coated Aluminum frames, colour to match existing window & door frames.

All secondary glazing to be sized to existing openings. Frames to be set within existing window & door frames and concealed from external view. Indicative frame sizes shown based on Storm system and information provided by Storm windows.

This drawing has been prepared based on survey drawings provided by others, dimensions shown are indicative and for planning purposes only. Contractor to carry out full site survey and dimension check prior to manufacturer.