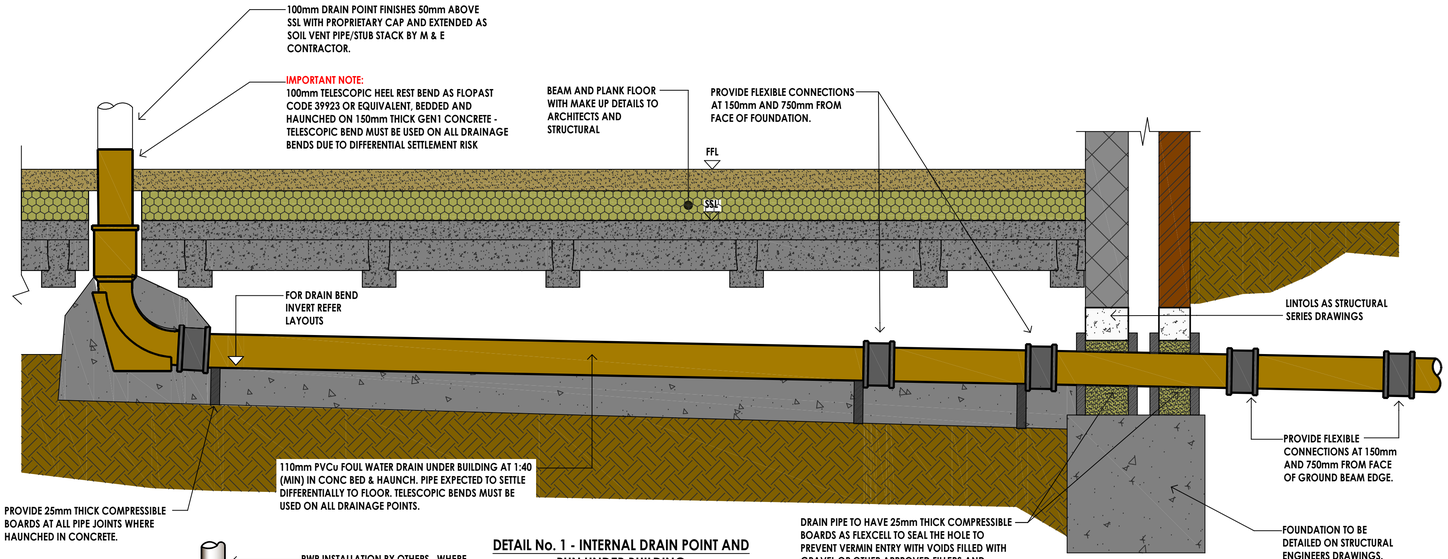

DETAIL No. 1 - INTERNAL DRAIN POINT AND RUN UNDER BUILDING

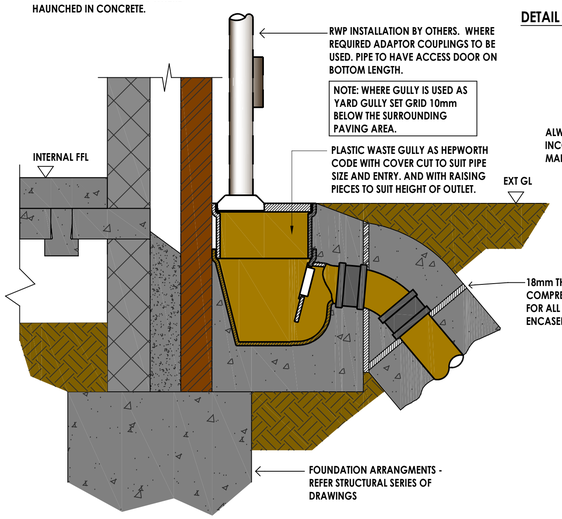

DETAIL No. 4 - EXTERNAL & LIGHTWELL RWP & TRAPPED RAINWATER GULLY (RWG)

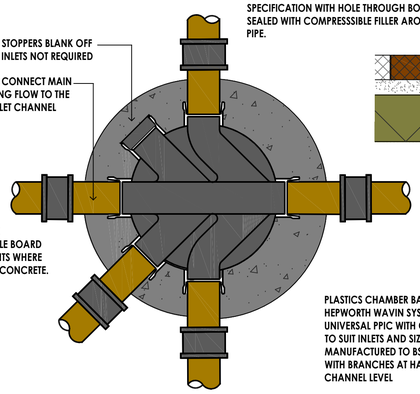

CHAMBER PLAN

GENERAL SIZING OF CHAMBER (SEE PROJECT DRAWINGS FOR ACTUAL SIZES)

DEPTH	INT SIZE
< 1.0m	750Ø
1.0 - 1.5m	900Ø
> 1.5m	USE PCC SW CP DETAIL

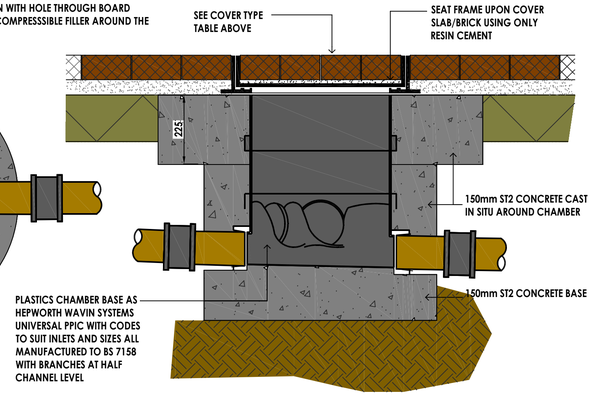

DETAIL No. 5 - POLYPROPYLENE INSPECTION CHAMBER (PPIC)

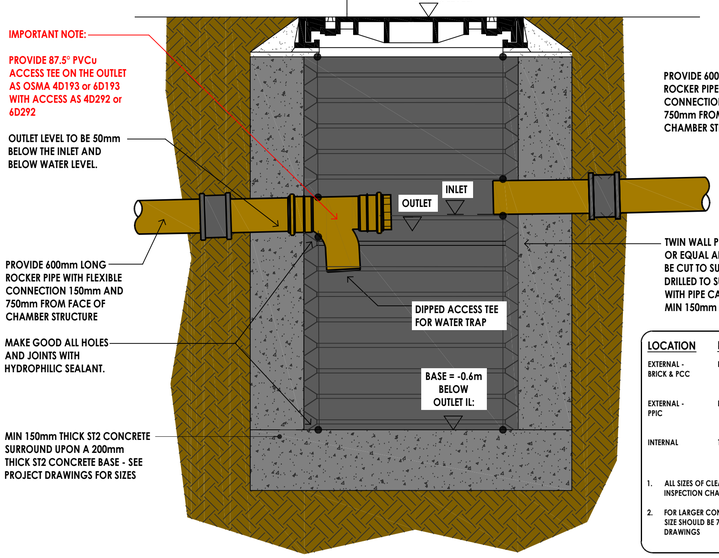

DETAIL No. 6 - POLYPROPYLENE STORM WATER CATCHPIT (PP SWCP)

LOCATION	FINISH	DUTY	COVER TYPE
EXTERNAL - BRICK & PCC	PAVED	FACTA B	600mm SQUARE RECESSED COVER AS SAINT GOBAIN STEELWAY 'BRIPAVE' RANGE
EXTERNAL - PPIC	BLACKTOP	D400	450mm SQUARE SLIDE OUT COVER AS SAINT GOBAIN 'INTER-AX'
INTERNAL	TILED/VINYL	FACTA B	900 x 600 COVER TO BE 'HOWE GREEN' AIR AND WATER TIGHT AS 7500 SERIES.

1. ALL SIZES OF CLEAR OPENINGS SHOULD BE AT LEAST SIZE OF INSPECTION CHAMBER FOR 300Ø PPACs AND 450Ø PPICs.
2. FOR LARGER CONCRETE AND BRICK MANHOLE CHAMBERS MIN SIZE SHOULD BE 700 x 700 - REFER TO MH DATA BOX ON PROJECT DRAWINGS

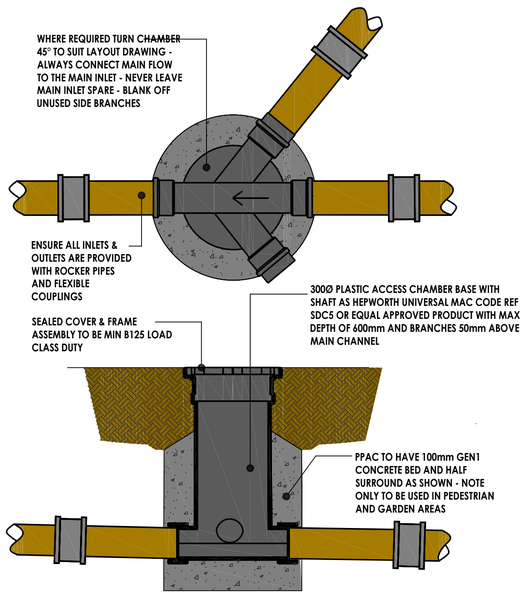

DETAIL No. 7 300Ø POLYPROPYLENE ACCESS CHAMBER (PPAC)

1. SAW CUT EXISTING SLAB
2. REMOVE SLAB
3. EXCAVATE FOR DRAINAGE TRENCH AND CAST IN PIPE AS SHOWN
4. AT 600mm CENTRES, DRILL HOLES FOR NEW 16mm DOWEL BARS 300mm LENGTH AND INSTALL WITH GROUT BONDING AROUND BARS.
5. PLACE 18mm THICK FLEXIBLE BOARD ADJACENT NEW DRAINAGE TRENCH SIDE & SLAB.
6. AFTER CASTING PIPE TRENCH, WATER PROOF JOINT AT SLAB LEVEL USING HYDROPHILIC SEAL.

NOTE: THE DETAIL SHOWN HERE IS SUBJECT TO CONTRACTORS FINDINGS ON THE EXISTING SLAB.

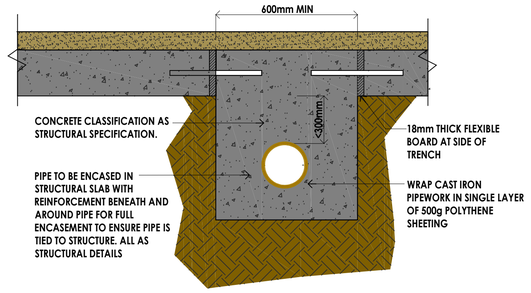

DETAIL No. 2 - PIPE TRENCHES IN EXISTING SLAB

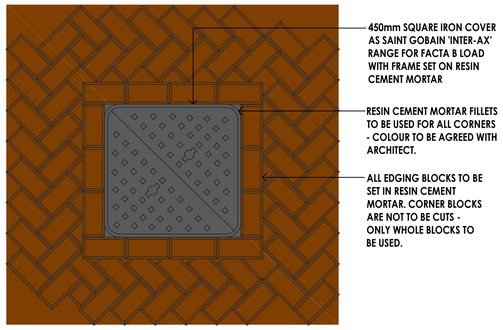

COVER PLAN WHEN USING SOLID IRON COVERS IN BLOCK PAVED AREAS

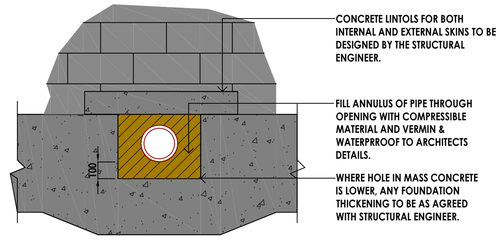

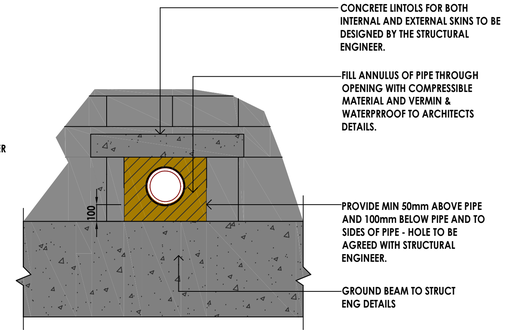

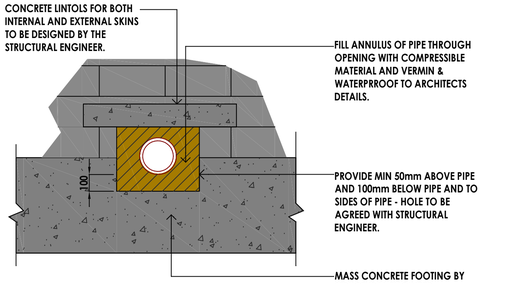

DETAIL No. 3 - DRAINAGE PASSING THROUGH NEW MASS CONCRETE FOUNDATION

FOR ALL GENERAL NOTES SEE SDA DRAWING No. 100

Rev	Description	Date	Chkd
P3	Detail no. 8 removed and no. 6 updated.	14/11/23	SAD
P2	Detail no. 4 altered to suit trapped gully addition.	10/10/23	SAD
P1	PRELIMINARY ISSUE	30/09/23	SAD

SIMON DENT ASSOCIATES
Civil - Infrastructure - SuDS - Flood Risk - Drainage - Rainwater - Sanitation - Public Health
Consulting Engineers
☒ Shoreham by Sea Office
☐ Gosport Office
simondent@live.co.uk
0754 658 3150

This is drawing is copyright and remains in the ownership of Simon Dent Associates (SDA)

This drawing should be read in conjunction with the design team's relevant documents, drawings & details.

Existing public & private utility services and drainage locations shown have been derived from non-intrusive survey techniques. Their location is not accurate and the contractor must satisfy himself using open excavation where the location of such plant and apparatus is critical in construction.

If the contractor has constructed from this drawing without necessary approvals from Local Planning Authorities, Building Control, Sewerage Undertakers, Environment Agency etc then any abortive work shall be at his own financial risk and not the responsibility of SDA.

If the contractor has constructed from this drawing whilst the drawing remains 'PRELIMINARY status, then any abortive work shall be at his own financial risk and not the responsibility of SDA.

The contractor should NOT construct any works should there be any doubt with information shown from any of the source. ALWAYS USE GIVEN DIMENSIONS ONLY. ALWAYS ASK IF IN DOUBT.

ALWAYS PRINT THIS DRAWING IN COLOUR

Client	Temple & Co Property Investments
Project	Southdown Inn, 38 Northcourt Road Worthing BN
Drawing title	Drainage Details 1
Drawing status	PRELIMINARY

Project no	Scales	Drawing no	Rev
1807	A1 - 1:10 A3 - 1:20	200	P3