FIGURE B.24
CONNECTIONS TO SEWER

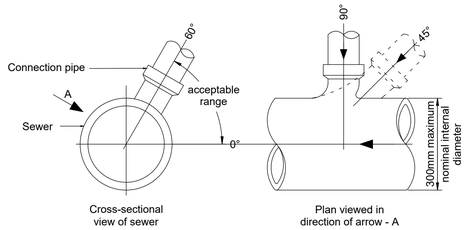

Connections to Offsite Sewer

(1:10)

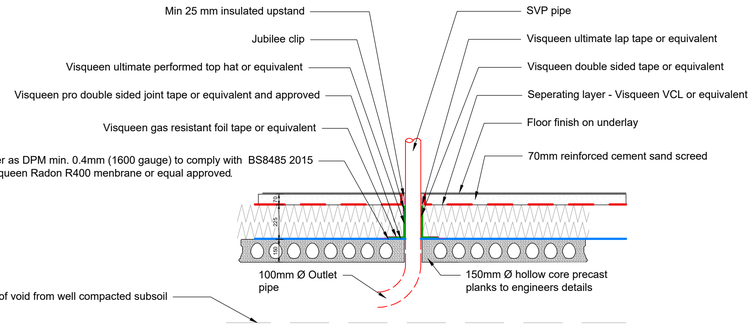

Slab Penetration Detail (SVP)

(1:10)

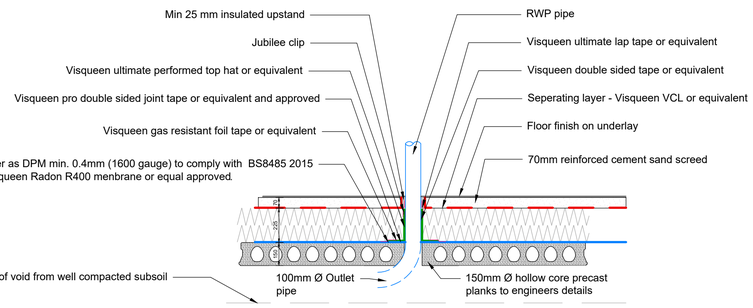

Slab Penetration Detail (RWP)

(1:10)

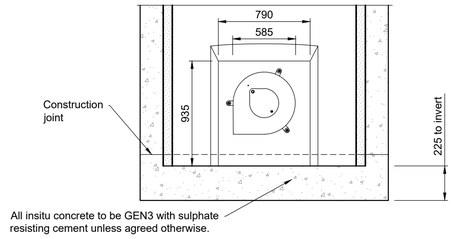

SECTION B-B

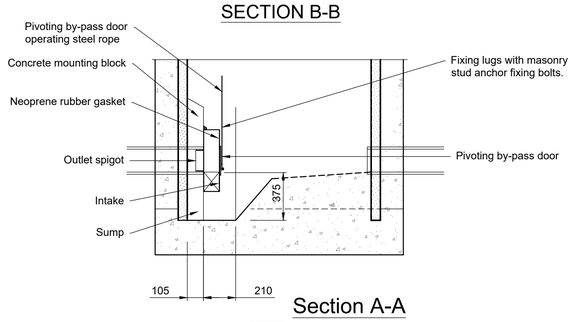

Section A-A

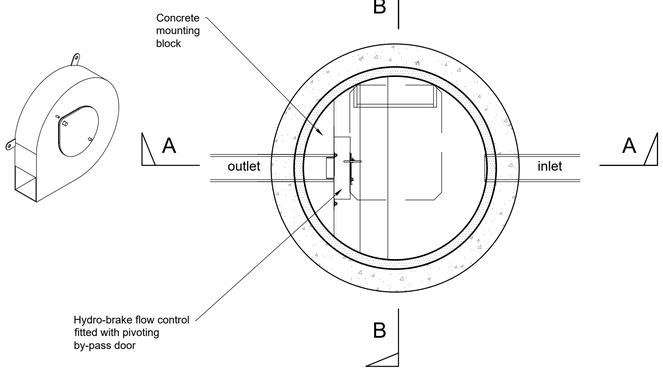

Typical hydrobrake details

(Manhole details as type B)

(1:20)

SWMH09 - MD-SHE-0096-5000-1610-5000

Technical Specification Criteria		
BBA Approved	Head (m)	Flow (L/s)
Design Point	1.610	5.000
Flush Flow	0.423	4.700
Kick Flow	0.863	3.750
Mean Flow		4.221

Notes

GENERAL

- This drawing is to be read in conjunction with all relevant Engineers and Architects drawings and with the Specification.
- For setting out refer to Architects drawings.
- All dimensions are in millimetres and levels are in metres unless noted otherwise.
- Contractor to take all relevant dimensions on site. Any discrepancies to be advised to the Engineer.
- Contractor to check/scan for services prior to construction to avoid any damage during works.
- These details must be read in conjunction with the proposed SWH drainage strategy drawing 0500 and manhole schedule 0501.

CONSTRUCTION ISSUE

Rev.	Amendment	Drn.	Chkd.	Appd.	Date
C01	Construction Stage 5 Issue	RD	TK	TK	08.03.24
T01	Tender Stage 4 Issue	RD	TK	TK	14.12.23
P01	Preliminary	RD	TK	NG	07.11.23

Project

Former HRMC Site, Durrington-on-sea

Drawing

Drainage Construction Details
Sheet 2 of 2

Client

McCARTHY STONE
Life, well lived

Scott White and Hookins
Structural Engineering | Civil Engineering | Sustainability and BREEAM | CDM Consultancy

Harman House, Andover Road, Winchester, Hampshire SO23 7BS
T: +44 (0)1962 844855 W: www.swh.co.uk E: info@swh.co.uk

Scale at A1 - 1:20

SWH Project Number: 303941

SO-2870-05-CE-0511-C01

CP004-01_FM_ST_008_D

DO NOT SCALE FROM THIS DRAWING