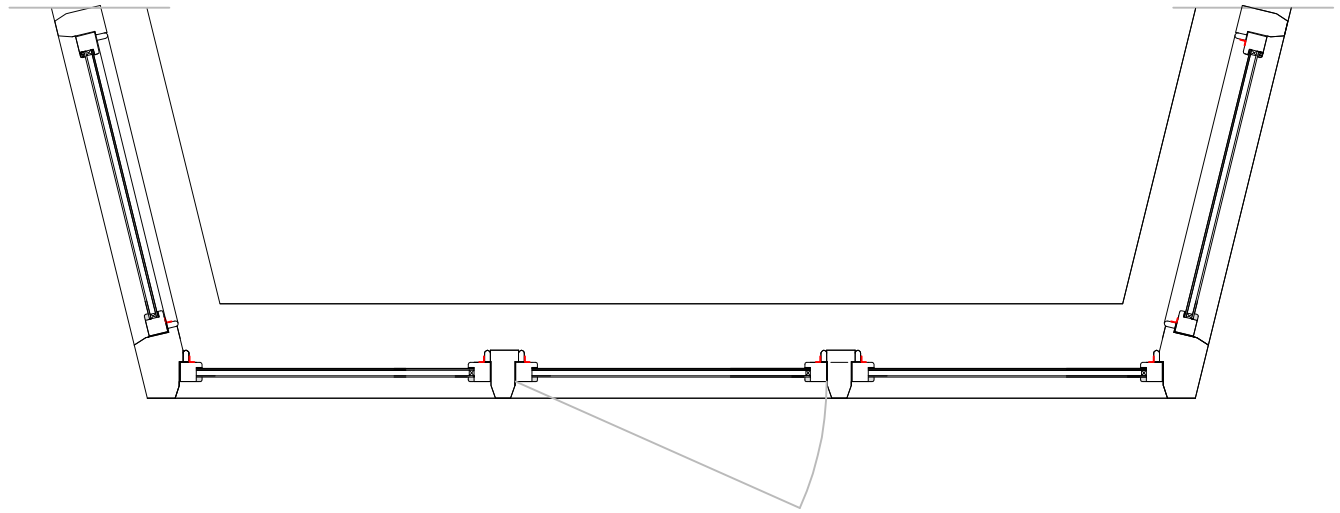

General Notes:

Do not scale dimensions from this drawing, unless for Planning purposes.

The Contractor is responsible for checking all dimensions on site prior to commencement of the works.

This drawing is to be read in conjuction with the specification.

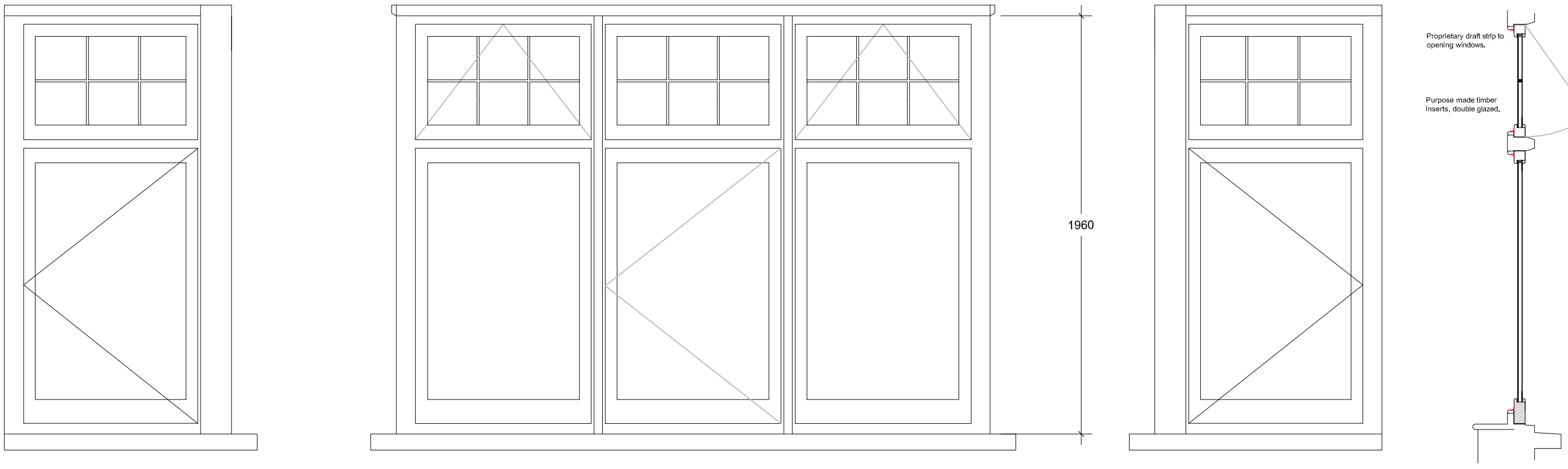

Proposed timber casement windows to Bay Window (A)

1:20

400mm 0 400mm 800mm 1200mm 1600mm 2000mm

B	01/12/2025	TIMBER DETAILS
A	02/09/2025	Update details

Brian Elstone Surveying Services Ltd
Brian Elstone, MCIOB,MCABE
Building Surveyor and Architectural Consultant
CDM Consultant
6 Canterbury Road, Rustington,
West Sussex, BN16 3JA
Phone: 01903 784884, Mobile: 07710 593021.
Email: brian@elstone.biz

Client:
Ms Gabriele Scott, Flat 1, 3 Cowper Road, Worthing, BN11 4PD.

Project:
Replace Windows to Front.

Drawing Title:
Proposed Windows - Bay Window A

Revision	Date	Description
Scale:	Date:	Drawn By:
1:20	09/06/2025	BE
Drawing Number:		Revision:
1697/004		B