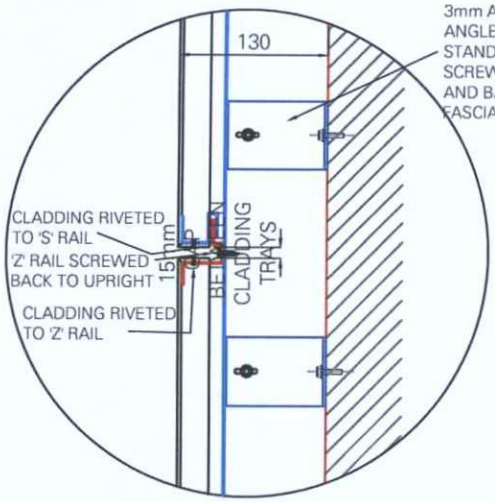

'Z' & 'S' RAILS FIXING DETAIL OF 'Z' & 'S' BETWEEN CLADDING TRAYS

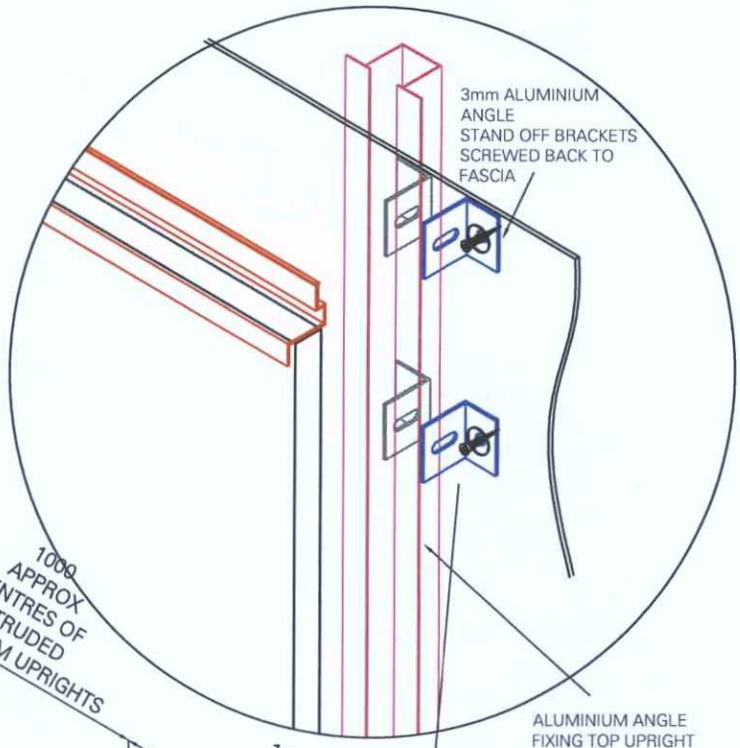

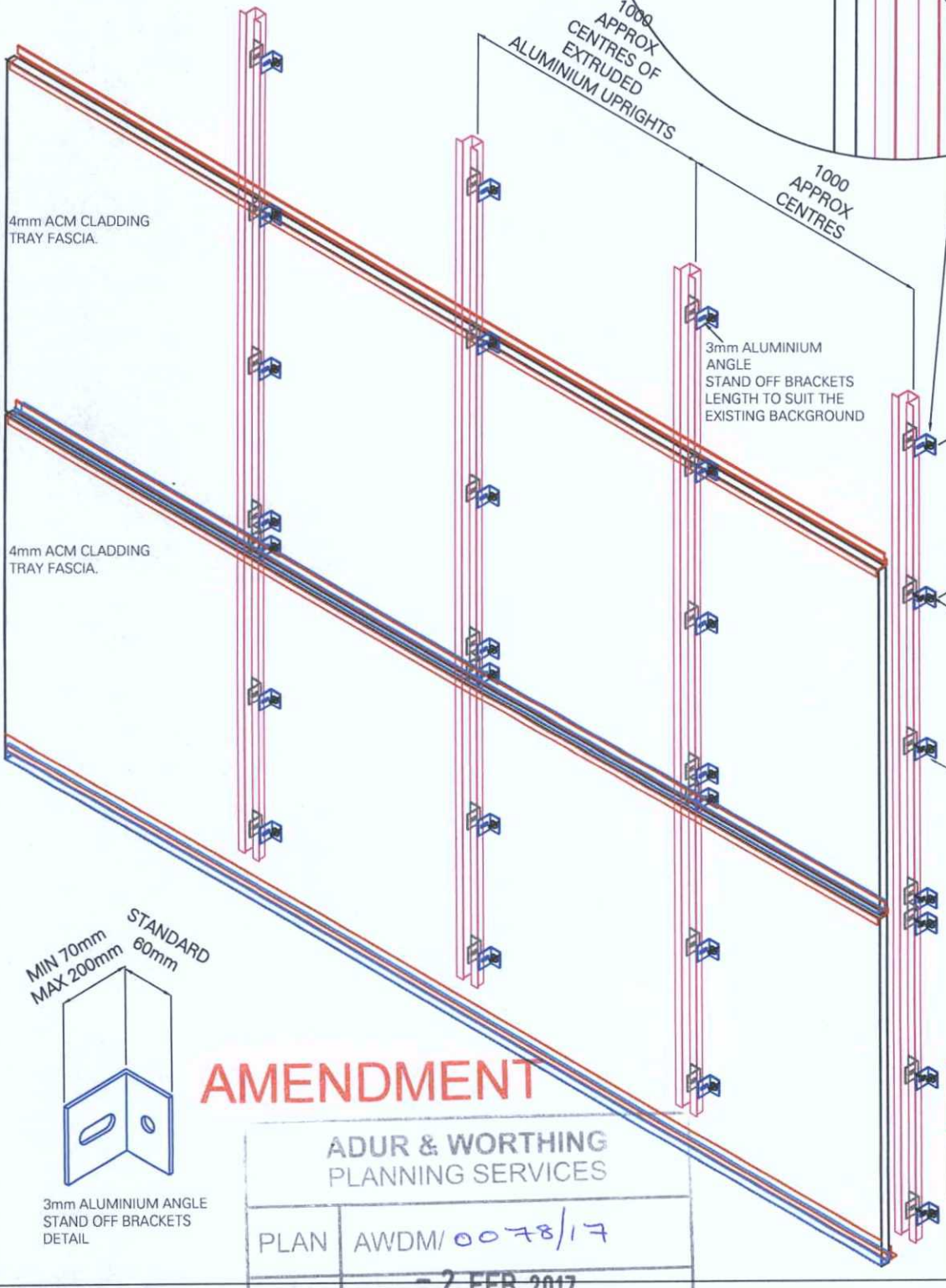

3mm ALUMINIUM ANGLE STAND OFF BRACKETS DETAIL

AMENDMENT

ADUR & WORTHING
PLANNING SERVICES

PLAN	AWDM/0078/17
DATE	- 2 FEB 2017

COPYRIGHT TARA SIGNS
DATE: 15/08/2016

tarasigns
St. Peters Place, Western Road,
Lancing, Sussex, BN15 8SB
Tel : 01903 750710
Fax : 01903 754008