# VENTO EXPERT A30 S10 W V.2

HEAT RECOVERY SINGLE-ROOM UNITS

## Features

- Arrangement of efficient energy-saving supply and exhaust single-room ventilation in flats, houses, cottages, social and commercial premises.
- Reducing heat losses caused by ventilation due to heat recovery.
- Humidity balance and regulated air exchange create individually controlled microclimate.
- Wi-Fi communication between several single-room ventilation units for coordinated operation.
- Controlled by Android or iOS smartphone or tablet.

**Air flow:**
up to 30 m³/h
8 l/s

**Heat recovery efficiency:**
up to 81 %

**Power:**
from 1.8 W
**SFP:** from 1.06 W/l/s

**Noise level:**
from 21 dBA



## Design

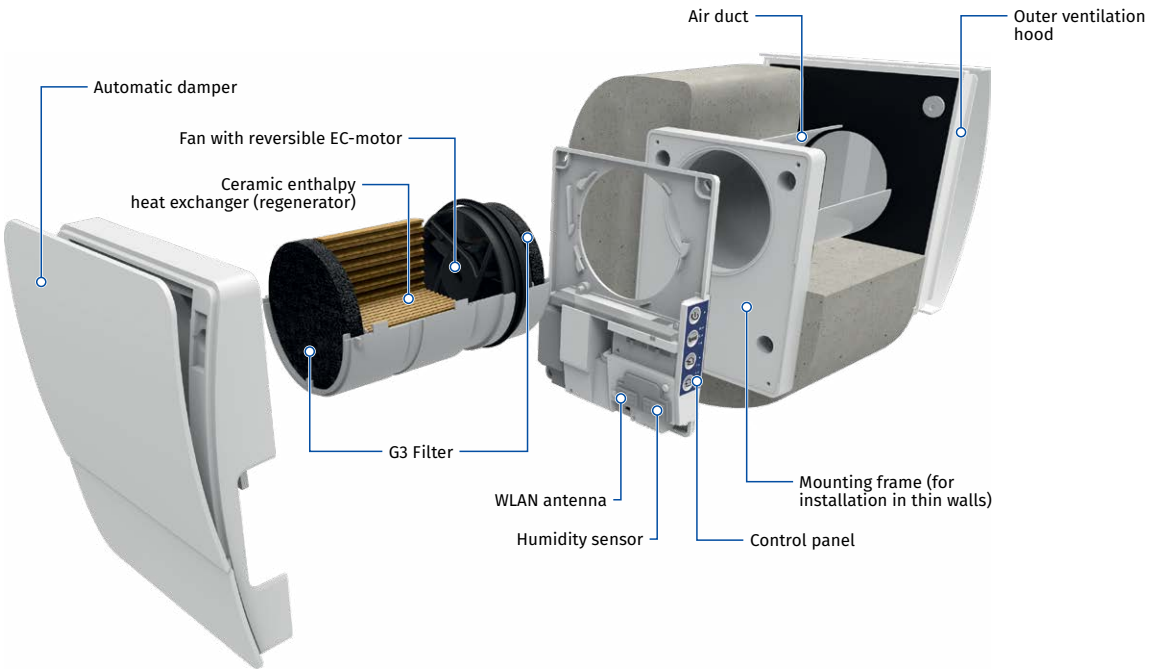




One of the best regeneration efficiency on the market due to innovative hexagonal structure of the heat exchanger cells

Built-in Wi-Fi for wireless communication between units and Android or iOS device control

## Designation key

| Model | Air duct | | Nominal air flow [m³/h] | Ventilation hood type | Control |
|---|---|---|---|---|---|
| Vento Expert | **A:** round air duct | – | **30** | **S10:** white plastic hood AH-10 white 100 | **W V.2:** control and setup of the unit with the Wi-Fi mobile application |

# VENTO EXPERT A30 S10 W V.2



## Heat and moisture regeneration

### UNIT OPERATING LOGIC IN WINTER PERIOD

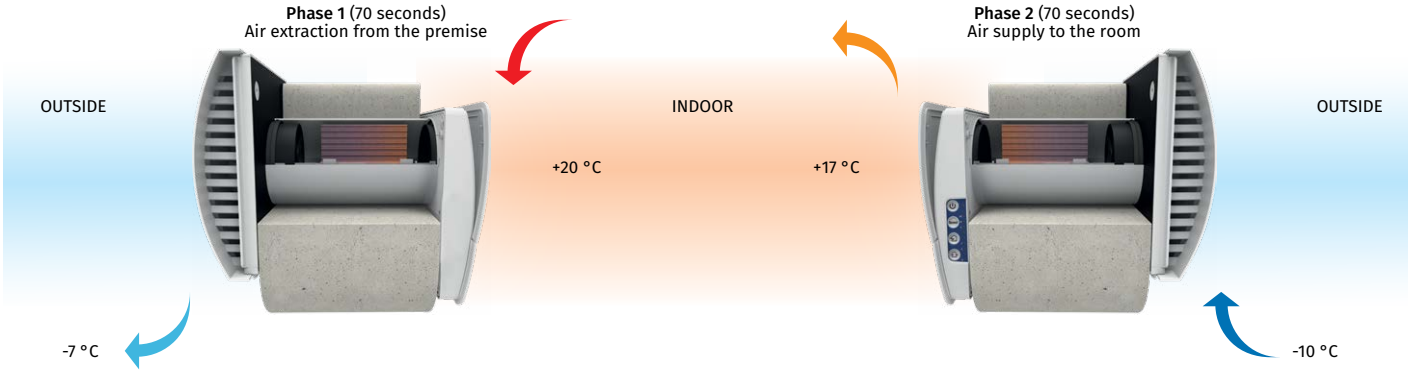


- Warm stale air is extracted from the premise, flows through the ceramic regenerator and transfers its heat energy and moisture to it.
- As the ceramic regenerator gets warmed up, the unit switches to the supply mode.
- Clean cold intake air flows through the regenerator and absorbs accumulated heat and humidity.
- When the ceramic regenerator is cooled down, the unit switches to the extract air mode.

## Control

- Control of the unit operation mode is performed by means of smartphone or tablet. Wi-Fi communication between several units for coordinated operation is available.



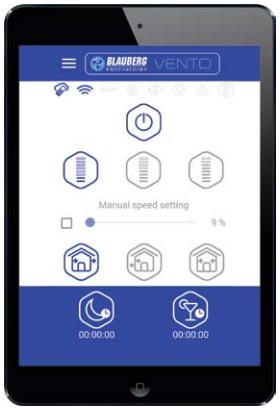


**Blauberg Vento V.2** app for Android or iOS devices is available at Google Play and App Store.

GET IT ON Google Play

Download on the App Store

# VENTO EXPERT A30 S10 W V.2

HEAT RECOVERY SINGLE-ROOM UNITS

## Mounting

- The unit is designed for through-the-wall installation inside a prepared hole in an outer wall of the building.
- The best ventilation solution is pairwise installation of reverse phase synchronized units. Some units ensure supply of fresh air to the room and the other units extract air from the premise. This way the most efficient balanced ventilation is arranged.
- In case of brand new construction, units are mounted in two stages:
  - Pre-installation of an air duct and an outer ventilation hood at the stage of indoor finishing and outer decorative wall finishing.
  - Completion of the installation before commissioning of a house. It includes installation of the indoor unit with controller and air damper, the cartridge, the regenerator, the fan and the filters.

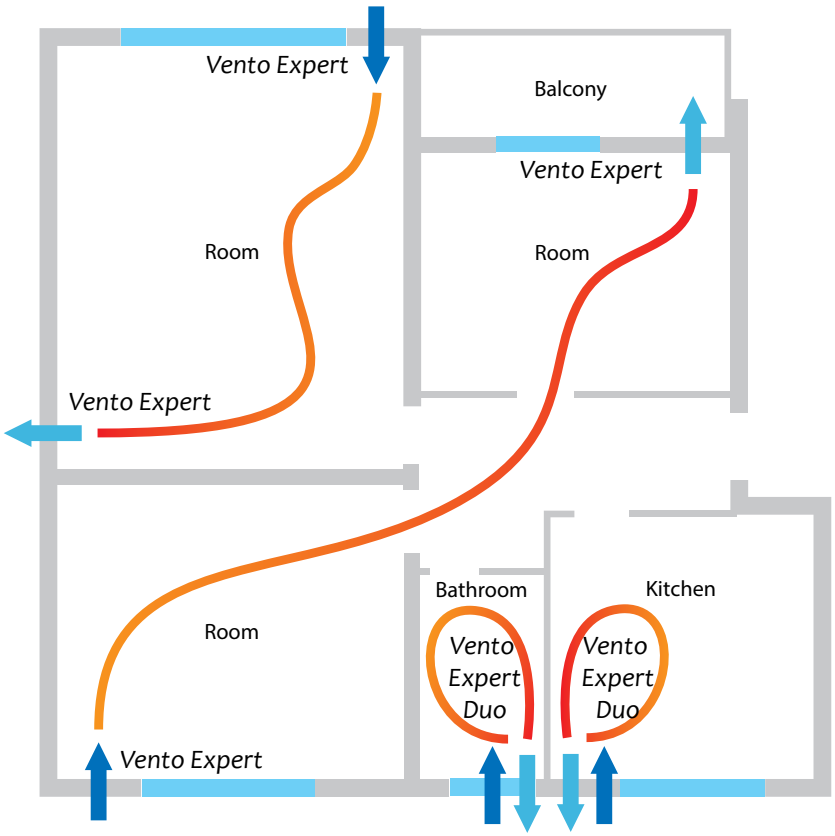


With mounting frame for thin walls



Angular mounting into a wall with standard thickness using **KIT BlauPlast white 100 / KIT BlauPlast chrome 100**



# VENTO EXPERT A30 S10 W V.2

HEAT RECOVERY SINGLE-ROOM UNITS

## Technical data

| Parameters | Vento Expert A30 S10 W V.2 | | |
|---|---|---|---|
| Speed | I | II | III |
| Voltage [V/50 (60) Hz] | | 100–240 | |
| Power [W] | 1.80 | 3.00 | 4.40 |
| Current [A] | 0.027 | 0.037 | 0.051 |
| RPM [min⁻¹] | 1600 | 2200 | 2500 |
| Air flow in ventilation mode [m³/h (l/s)] | 10 (3) | 20 (6) | 30 (8) |
| Air flow in heat recovery mode [m³/h (l/s)] | 5 (1) | 10 (3) | 15 (4) |
| SFP [W/l/s] | 1.30 | 1.08 | 1.06 |
| Filter | | G3 | |
| Transported air temperature [°C] | | -15...+40 | |
| Sound pressure level at 1 m [dBA] | 30 | 37 | 40 |
| Sound pressure level at 3 m [dBA] | 21 | 28 | 31 |
| Outdoor sound pressure attenuation [dBA] in accordance with DIN EN 20140 | | 42 | |
| Heat recovery efficiency in accordance with DIBt LÜ-A 20 [%] | | up to 81 | |
| Ingress protection rating | | IP24 | |

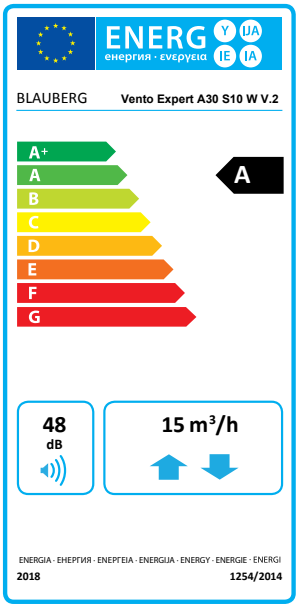


## Overall dimensions [mm]

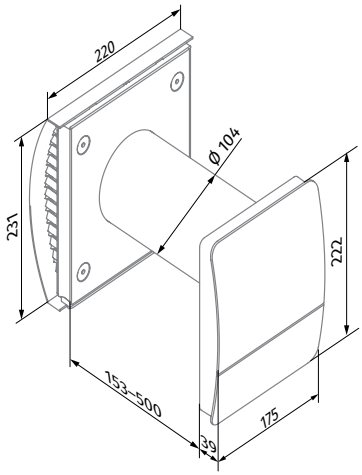


Vento Expert A30 S10 W V.2

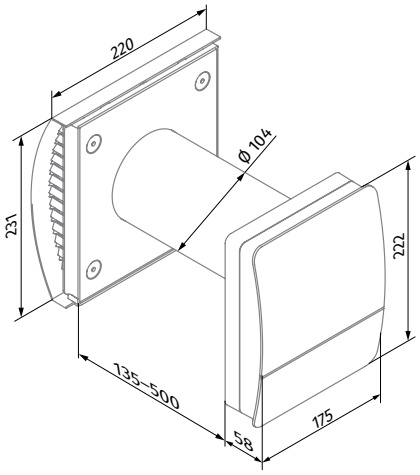


Vento Expert A30 S10 W V.2
(with a mounting frame for thin walls)

# VENTO EXPERT A30 S10 W V.2

HEAT RECOVERY SINGLE-ROOM UNITS

## Accessories

| Name | | Description |
|---|---|---|
| Pre-installation Kit Vento Expert A30 S10 |  | Pre-installation kit for mounting into a wall with standard thickness. Includes:<br>• Air duct<br>• AH-10 white 100 outer ventilation hood<br>• Plastic foam plug<br>• Plastic foam wedges |
| Completion Kit Vento Expert A30 W V.2 |  | Final mounting kit. Includes:<br>• Cartridge with a heat regenerator, a fan and G3 filters<br>• Indoor unit with a controller and air damper |
| FP3 Vento G3 |  | G3 filters (2 pcs.) |
| AH-10 *colour* 100 |  | Plastic outer ventilation hood. Available in colours: white, black, grey, terracotta, brown, vintage |
| AH-10 chrome 100 |  | Plastic outer ventilation hood with a plate with brushed stainless steel effect finish |
| KIT BlauPlast white 100 |  | Kit for angular mounting with white color grille (for walls with standard thickness) |
| KIT BlauPlast chrome 100 |  | Kit for angular mounting with stainless steel outer grille (for walls with standard thickness) |
| BlauPlast RTR 100/0.35-0.5 |  | Telescopic air duct with the diameter of 100 mm and adjustable length from 350 to 500 mm |
| BlauPlast RTR 100/0.5-1 |  | Telescopic air duct with the diameter of 100 mm and adjustable length from 500 to 1000 mm |
| SE Vento Expert W |  | Sensor control panel |
| CD-1 |  | $CO_2$ sensor with LED $CO_2$ indication and a sensor button for operation mode selection |
| CD-2 |  | $CO_2$ sensor |
| S Vento Expert A30 |  | Cardboard template for indoor installation of the unit |