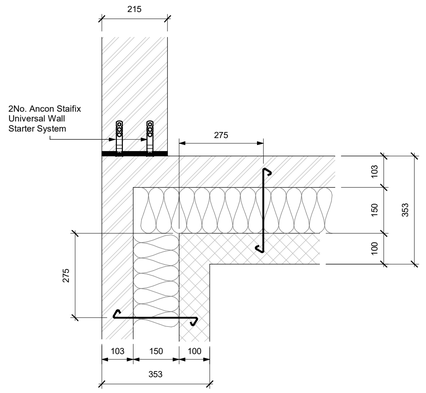

1 Typical Movement Joint Masonry Tying Detail 1
1 : 10

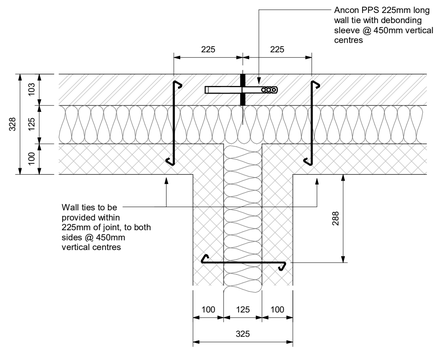

2 Typical Movement Joint Masonry Tying Detail 2
1 : 10

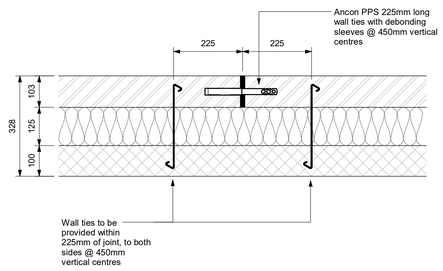

3 Typical Movement Joint Masonry Tying Detail 3
1 : 10

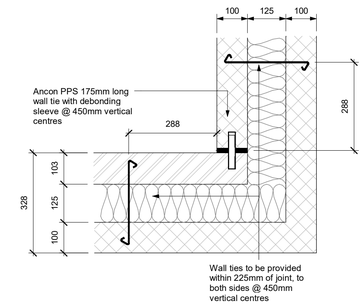

4 Typical Movement Joint Masonry Tying Detail 4
1 : 10

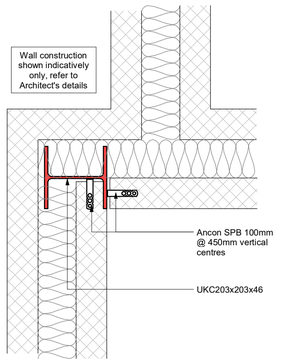

5 Column Tying Detail - UKC203x203x46
1 : 10

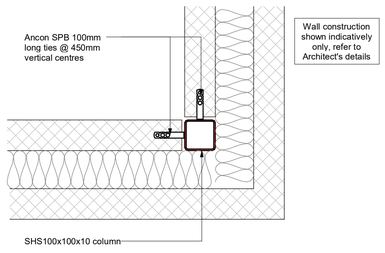

6 Column Tying Detail - SHS100x100x10
1 : 10

GENERAL NOTES:

1. This drawing is to be read in conjunction with all relevant Architect's, Engineer's and specialist Sub-contractor's drawings and specifications.
2. All setting out to be in accordance with the Architects drawings, any discrepancies between the Engineers and Architects drawings to be referred to the Architect before proceeding. Dimensions must not be scaled.
3. All dimensions are in millimetres; levels are in metres A.O.D. (Above Ordnance Datum).
4. If any works proceed on site prior to receiving approval from any warranty provider, approved inspector or insurance provider (e.g. NHBC, Premier Guarantee, LABC) that may impact the final design and/or details the contractor/client are proceeding at their own risk.
5. See drawing 100 for all other notes.

THE INFORMATION SHOWN ON THIS DRAWING IS SUBJECT TO A DETAILED DESIGN REVIEW AND CO-ORDINATION WITH THE DESIGN TEAM PRIOR TO CONSTRUCTION. THIS MAY RESULT IN VARIOUS CHANGES OR ADDITIONS, THEREFORE A COST CONTINGENCY SHOULD BE ALLOWED FOR.

Rev	Date	Description
T1	13.06.2023	Issue for Tender

Calcinotto
First Floor South
Waterloo House
Fleets Corner
Poole BH17 0HL
01202 237237
info@calcinotto.co.uk
www.calcinotto.co.uk

Client
Hampshire Homes

Project Title
22 Clifton Road

Drawing Title
Typical Details & Sections - 2

Drawing Status
SUITABLE FOR TENDER

Originator No	Rev by	Chk by	Scale @ A1
114676	NS	PB	As indicated

PROJECT | ORIGINATOR | ZONE | LEVEL | TYPE | ROLE | NO.
114676-CAL-XX-ZZ-DR-S-502

Revision
T1