PROPOSED Communication Hub Elevations

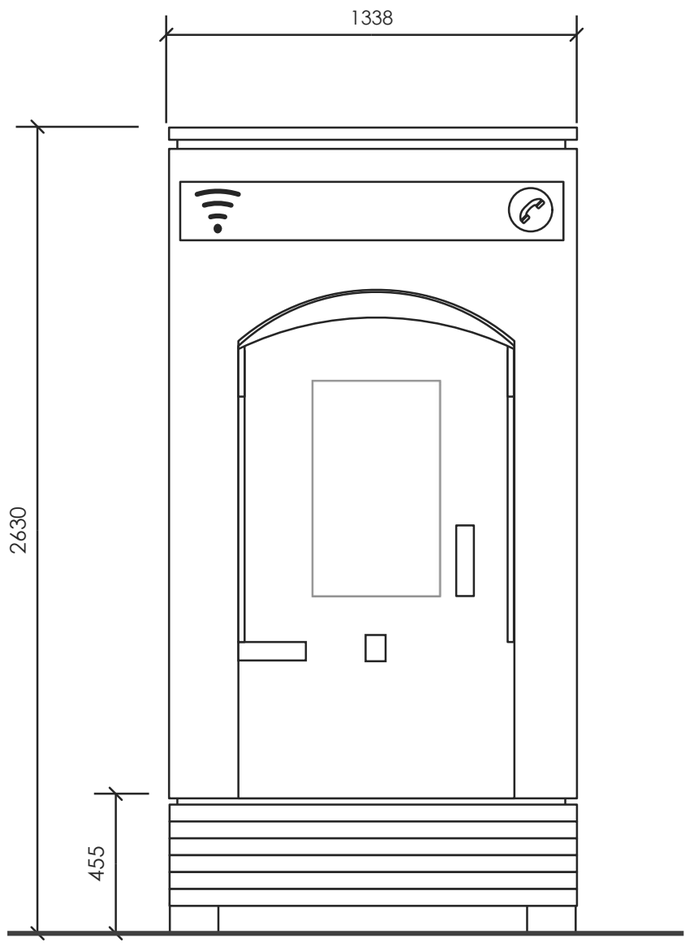

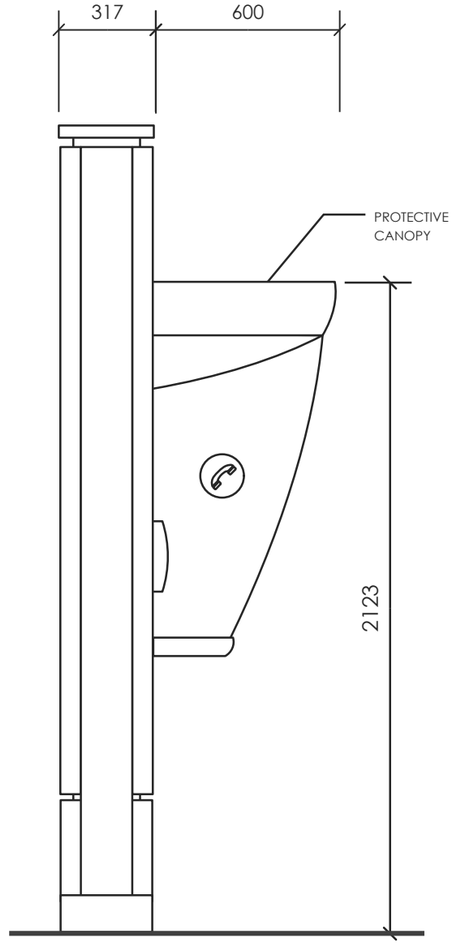

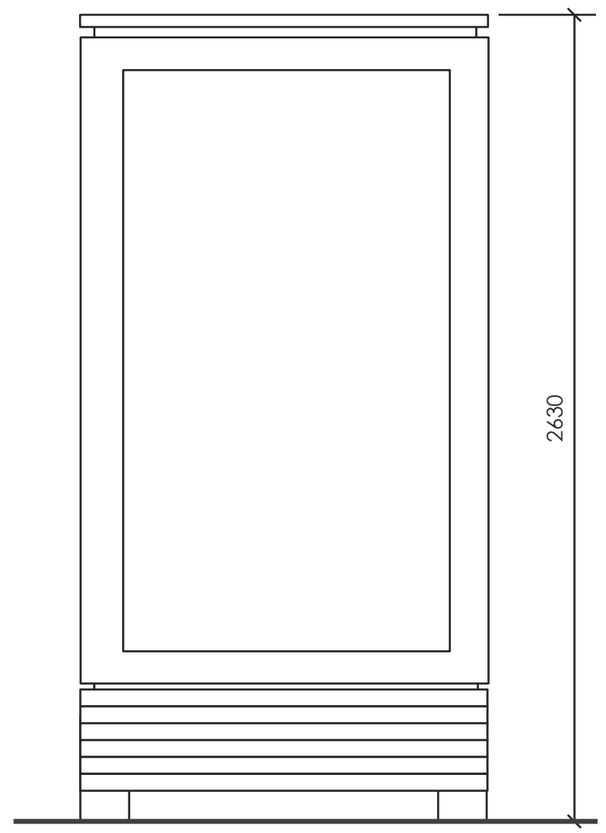

0 0.6 1 2

	Infocus Communication Hub			
	SIZE A3	FSCM NO	DWG NO A/489467/	REV A
	SCALE 1 : 20		SHEET 1 of 1	