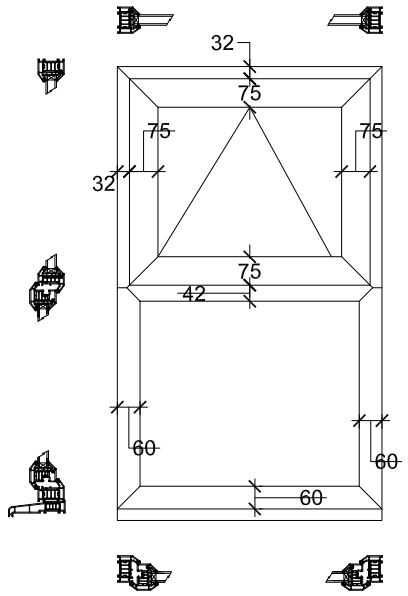

Standard Detail for Proposed PVC Double glazed windows Rehau Total 70 Range

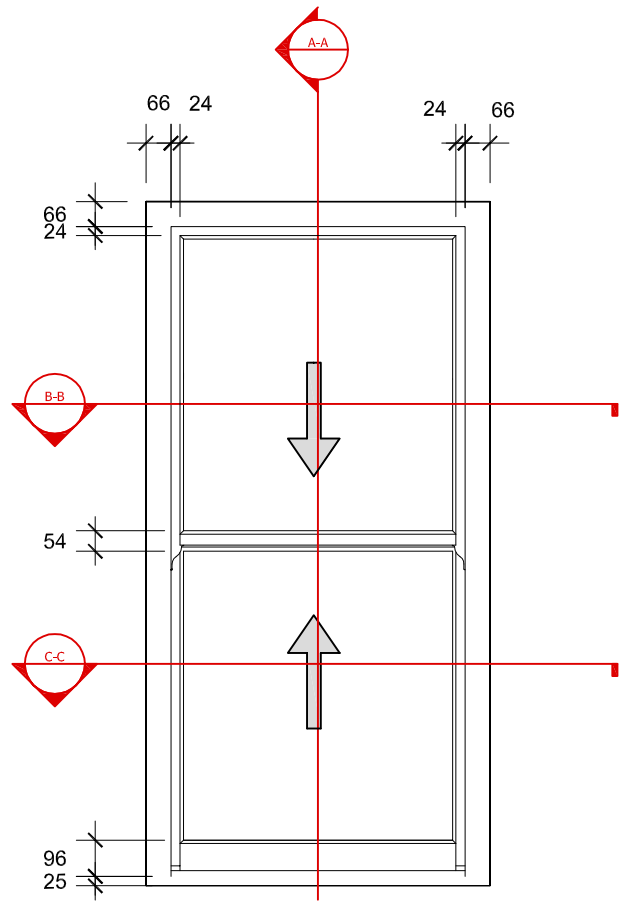

Profile dimension vertical sliding windows Numbers: 1 & 2

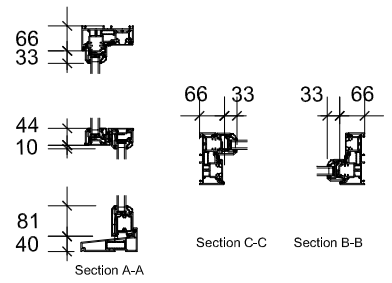

REHAU Heritage Range with narrow profile sections to front elevation
To match existing front and side elevations

General Notes:

Do not scale dimensions from this drawing, unless for Planning purposes.

The Contractor is responsible for checking all dimensions on site prior to commencement of the works.

This drawing is to be read in conjuction with the specification.

Brian Elstone Surveying Services Ltd
Brian Elstone, MCIOB, IMaPS, MCABE
Building Surveyor and Architectural Consultant
CDM Consultant
1 Herne Court, Station Road, Rustington,
West Sussex, BN16 3BQ
Phone: 01903 784884, Mobile: 07710 593021.
Email: brian@elstone.biz

Client:
L. Keys, 8 Haynes Road, Worthing, BN14 7JY

Project:
Flat 5, 11 Oxford Road, Worthing, BN11 1XG

Drawing Title:
Proposed PVC Window Details

Revision	Date	Description

Scale:	Date:	Drawn By:
1:20	24/08/2023	BE

Drawing Number:	Revision:
1605/004	-