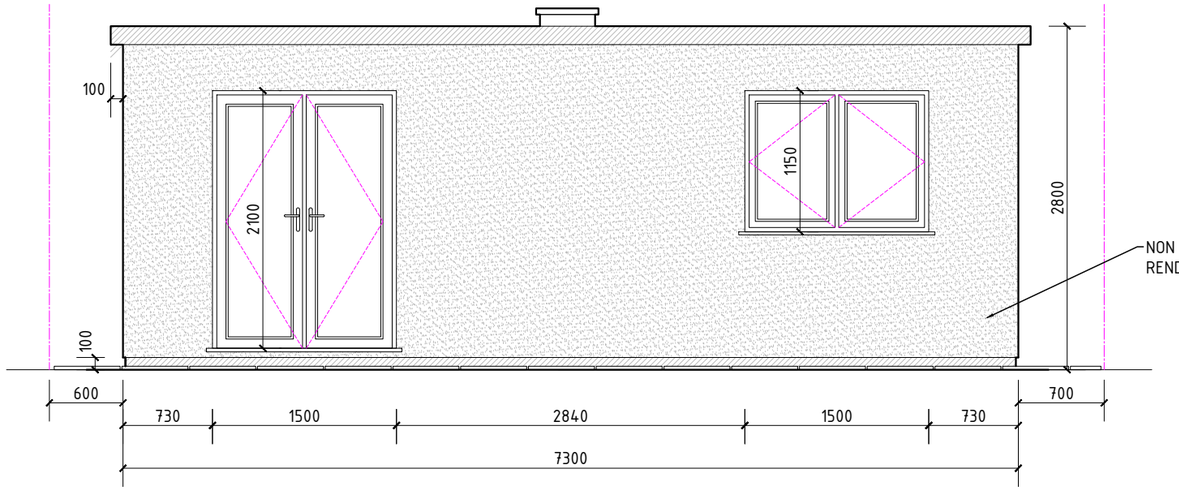

PROPOSED FRONT ELEVATION (FACING EAST)

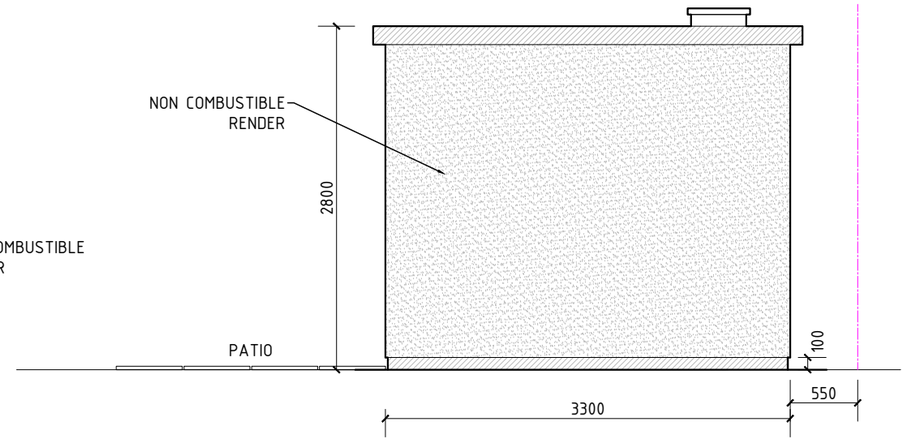

PROPOSED RIGHT SIDE ELEVATION (FACING NORTH)

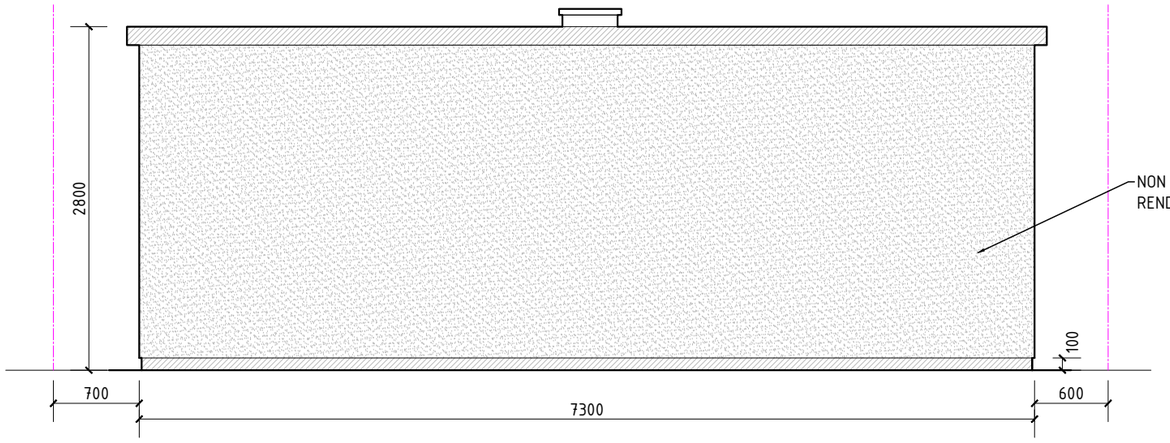

PROPOSED REAR ELEVATION (FACING WEST)

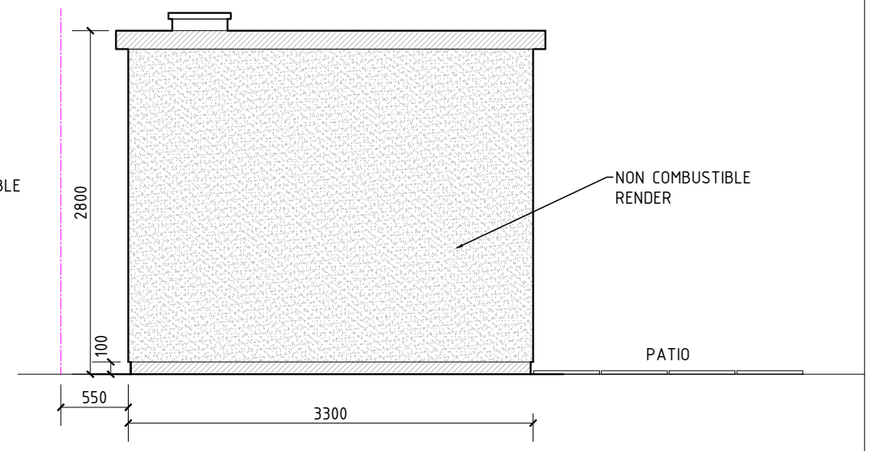

PROPOSED LEFT SIDE ELEVATION (FACING SOUTH)

PlanStore

Drawings and associated specification documents are to obtain planning / building regulations approval. All drawings are based upon information provided by the client. All work is to be carried out in accordance with local authority/approved inspector requirements, to manufacturers recommendations and instructions, all relevant British standard codes of practice and good building practices generally. No work to be carried out until planning permission has been approved and building regulations have been approved / conditionally approved.

All heating appliances are to be installed in accordance with the relevant regulations and certificates of installation shall be provided upon completion of the works by a GAS SAFE or OFTEC approved engineer.

All electrical works are to be completed by a competent Part P qualified electrician. All existing services within the vicinity of the works are to be located and suitably protected.

The contractor is to check and verify all building conditions, dimensions, levels and sewer invert levels before the commencement of works on site. This drawing must be read in conjunction and checked against any structural or other specialist drawings provided. All structural works must be checked by a qualified structural engineer.

The safety requirements of the health and safety at work act 1974, the management of health and safety at work regulations 1992 and the construction (health, safety and welfare) regulations 1996 are to be adhered to where appropriate. At all times on site operatives at work must wear full protective clothing in accordance with the regulations. The contractor is to comply in all respects with the current building regulations whether specifically stated on this drawing or not. Approved inspector/Building control must be notified at each stage of the building operation. All planning approval conditions, whether stated on the drawing or not must be complied with (client to be consulted).

Any constructional variation must have the approval of planning, building control and the client. The client is to be notified by the nominated contractor of any cost variation to building work before it is carried out. Any deviations from the drawings are carried out at the risk of the contractor/client.

All dimensions are indicative, and to be checked on site first. Client is responsible for fulfilling their obligations under the party wall act.

Construction of the following requires notice as specified; 1) New walls or buildings on boundaries between adjoining properties or land, and or 2) carry out repairs or modifications etc to existing party wall including underpinning or inserting a damp proof course (DPC) and 3) Excavations near to a neighbours buildings or wall and excavate deeper than the adjacent structures, foundation, or base of the structure. The owner should give notice using the appropriate letter format, within the specified time to the neighbour or parties involved prior to work commencing. Failure to comply with the terms of the party wall act 1997 may result in prosecution for a fine and/or paying compensation to the adjacent owner. Further information on the party wall act can be found at www.gov.uk/party-wall-etc-act-1996-guidance.

Similarly, the client is responsible for fulfilling their obligations of a build over or near to agreement with the necessary utility authority if works are to be carried out on, or near to the drain run, inspection chamber or manhole that is a public sewer.

Client/contractor to investigate prior to commencement of works on site, and liaise with the client, relevant authorities and Approved Inspector/Building Control, as required. Existing foundations, walls, roof and associated structural support, and all other necessary aspects of existing construction to be investigated by the contractor on site and where required proved to be adequate/suitable prior to commencement of works.

No.	Revision/Issue	Date

Client Name and Address
Mr Victor Lekvinadze
147 George V Avenue
Worthing
West Sussex
BN11 5RZ

Project details
New Garden office at:
147 George V Avenue
Worthing
West Sussex
BN11 5RZ

Project No	Sheet
VL/TW/2023	4
Date	Revision
June 2023	
Scale(s)	Drawn By
1:50	TW