T.P. OFFICE COPY

9

Victorian Sliders

SASH WINDOWS



BOROUGH OF WORTHING
DEPOSITED 11/3/10
TP REF NO
WB / 10 / 0192 / FULL











Victorian Sliders introduce the NEW A rated ECO Slide Sash Window

The visual appearance of a traditional style timber sash with all the features and benefits that modern technology and UPVC provides. Narrow sight lines compliment elegant contoured profiles with meticulous thought & consideration given to appearance, performance and durability.

- **Fully featured sculptured profiles**
- **A host of security features built-in**
- **Georgian bar and sash horn options**
- **Easy-clean feature as standard**
- **Sizes up to 1600mm x 3000mm**

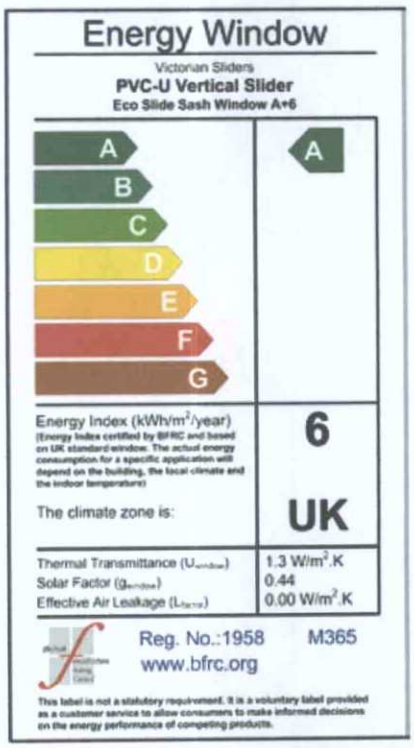

ECO FRIENDLY lead-free

Eco Friendly Lead Free PVC
Calcium Zinc

Call now on 0845 1700 810 for more information

Tel: 0845 1700 810 Fax: 0845 1700 820
Email: sales@victoriansliders.co.uk Web: www.victoriansliders.co.uk

(11)

Victorian Sliders
SASH WINDOWS



100% lead free virgin material extruded in the UK

Reinforcement (thermal insert) 100% recycled material

Improved Thermal Efficiency

Fully featured sculptured profiles

Design closely replicates traditional timber sashes

Integral security bar on cill

Reduced sight lines

Range of Georgian Bar options

Sash Horn options

Transom drop options - equal - 60/40 - 70/30

Can be coupled or inserted into 90 deg. or splayed bays

Wide range of standard colours / foils - additional colours available on request

A selection of hardware in a variety of colours and finishes



Tested to BS 6375-1 2009 - Performance of Windows and Doors - PASSED
Air Permeability 600Pa/ Class 2
Water Tightness under static pressure 200Pa / Class 5A
Wind Resistance / Class 4

Energy Rated 'B' as standard, by changing glass specification
A+1 or A+6 can be easily achieved with minimal extra cost



Easy clean feature as standard

Sizes up to 1600mmx 3000mm







Performance

Right from the initial conception of this Vertical Slider, very careful consideration has been given to all aspects of design, performance, appearance and above all it's ability to perform to the highest standards when subjected to rigorous testing to comply with ever changing more stringent legislation in a demanding competitive market. The profile is extruded at a state of the art extrusion plant in the UK to a very high specification.

The narrow sight lines and sculptured sashes create a visually stunning appearance reminiscent of the traditional timber sashes but with the benefits and advantages that modern technology and performance that UPVC profiles provide. The profiles are extruded from 100% virgin lead free compound, with the exception of the reinforcement which is extruded from 100% recycled material which obviously significantly improves the thermal performance of the system.

The window has passed BS.6375 Weather Test to ensure it will perform to the varying demands and climatic changes of the British weather. The slider is energy efficient and is available with **'B' Rating** as standard and by simply changing the glazing unit specification can easily achieve an **'A' Rating.**









Horizontal section through top sash

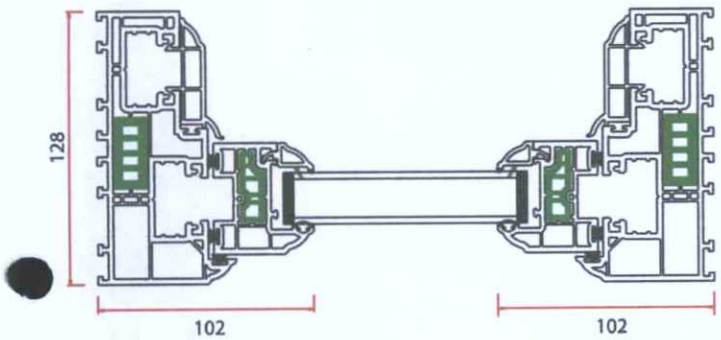

Vertical section through sash

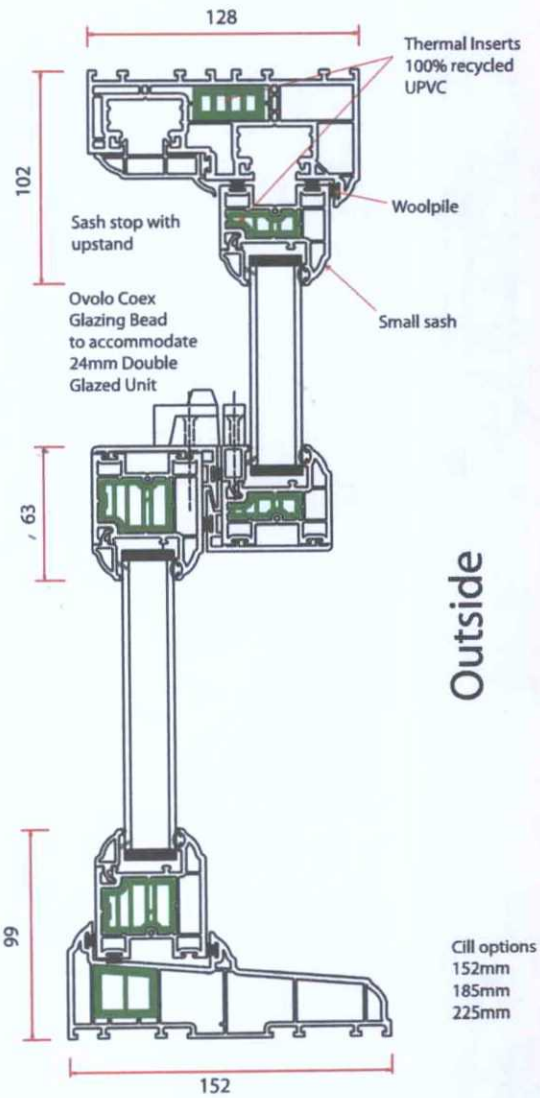

Horizontal section through bottom sash

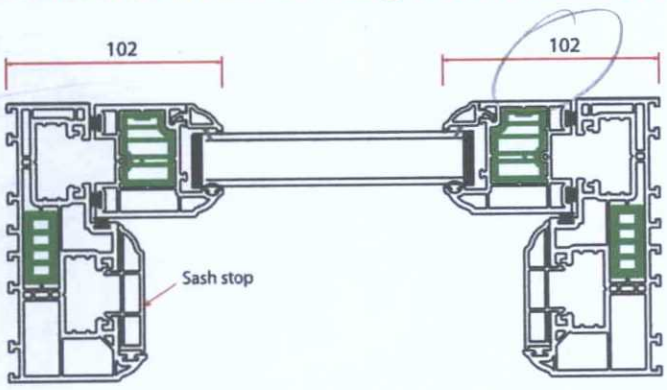

Outside

Tel: 0845 1700 810 • Fax: 0845 1700 820 • email: sales@victoriansliders.co.uk • Web: www.victoriansliders.co.uk

Window inside view

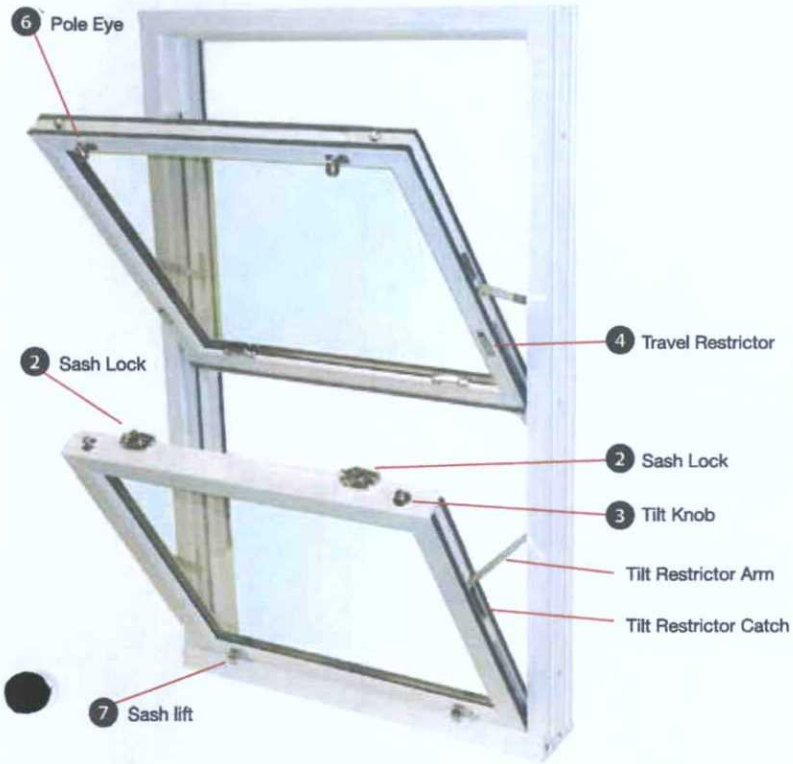

Window outside view



Styles & Options

The vertical sliding sash window is available in a variety of style options and colours, offering a wide choice to our customers. The extensive range of Georgian bar options should satisfy even the most discerning of customers. Sash horns are another popular choice replicating perfectly the traditional timber sashes. The vertical slider can easily be inserted into either splayed bays or 90 degree bays. Transom drop options are visible from a natural equal split to 60/40, 70/30 split or depending on customer requirements.

Arch tops present no problems to our specialist in house team and state of the art bending equipment can cater for any style that can be fabricated. A selection of hardware finishes and a variety of colour finishes.

1 Sash Horn



2 Sash Lock



3 Tilt Knob





4 Travel Restrictor



5 D Handle



6 Pole Eye



7 Sash Lift

Colour Options (Other Colours available on request)

