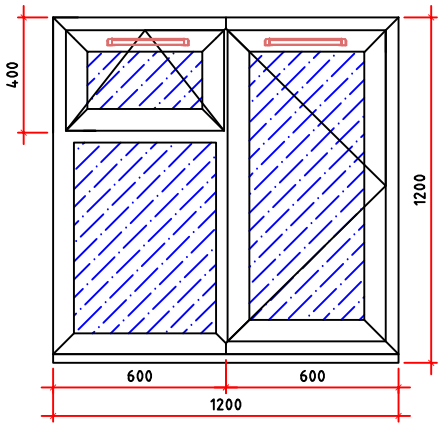

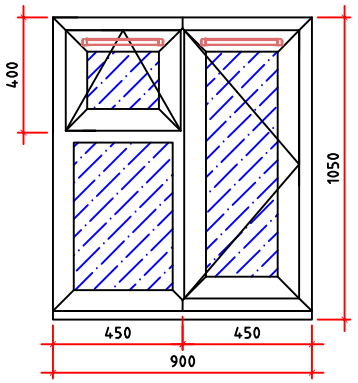

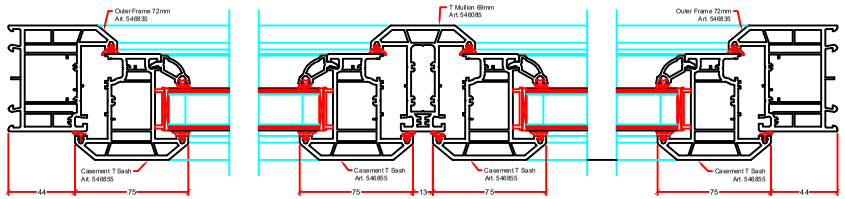

Horizontal Section through Casement/Casement

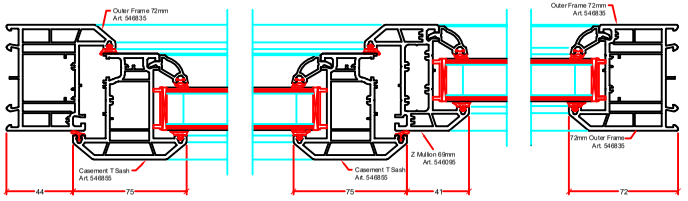

Horizontal Section through Casement and Fixed

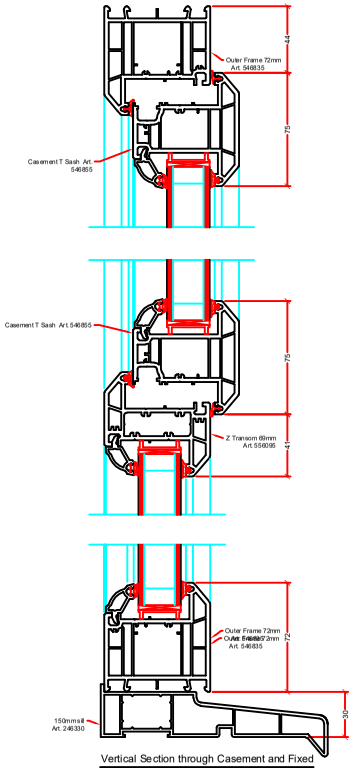

Vertical Section through Casement and Fixed

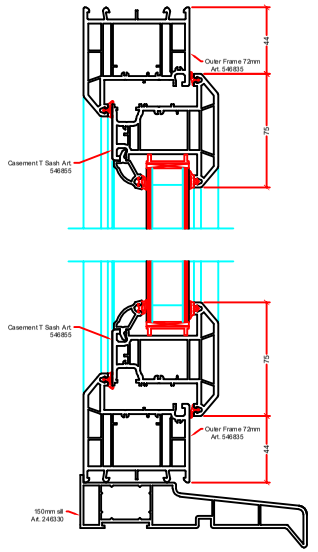

Vertical Section through Casement

SPECIFICATION	
System	Rehau 70mm PVCu casement window
Colour	Rosewood Foil External/White uPVC Internal
Cill	150mm cill
Beading	Internal
Hinges	Restrictor (Egress where Required)
Locking	Shootbolt Locking
Handle	White Key Locking
Reinforcement	Standard Rules Apply
Restrictor	Concealed spring catch (Egress only)
Trickle Ventilators	4000mm through Head of Sash
Secure By Design	Yes (where required)

GLAZING	
	Internally: 4mm Low 'E' Softcoat 20mm Argon gas filled cavity with Swiss 'V' Black thermal Spacer Externally: 4mm Clear Float (6.4 Laminated for SBD)

VIEWED FROM OUTSIDE

Revison No:	Description:
Date Revised:	
Revised By:	

Revison No:	Description:
Date Revised:	
Revised By:	

Revison No:	Description:
Date Revised:	
Revised By:	

Revison No:	A	Description:	Width changed to 900 on 1050 high window
Date Revised:	10/03/21		
Revised By:	IR		

Customer:
United Living

Job No:

Project:
Culver Court, Worthing

Title:
Proposed PVCu Window Types

Drawing Type: Approval

Original Drawn By: Ian Ramsey

Date: 10th March 2021

Scale:	Paper size:	Revision:
NTS	A4	A

Drawing No:	Sheet No:
SYM16287	04

Tolerance: ± 0.3mm unless otherwise stated

Symphony
WINDOWS, DOORS & CONSERVATORIES LTD.

This drawing is the property of Symphony Windows and Doors Ltd and may not be copied, used or disclosed without written permission from the company. 14 Salamanca Road, Tharston Industrial Estate, Long Stratton, Norfolk, NR15 2PF

Tel: 01508 530004, Fax: 01508 530006