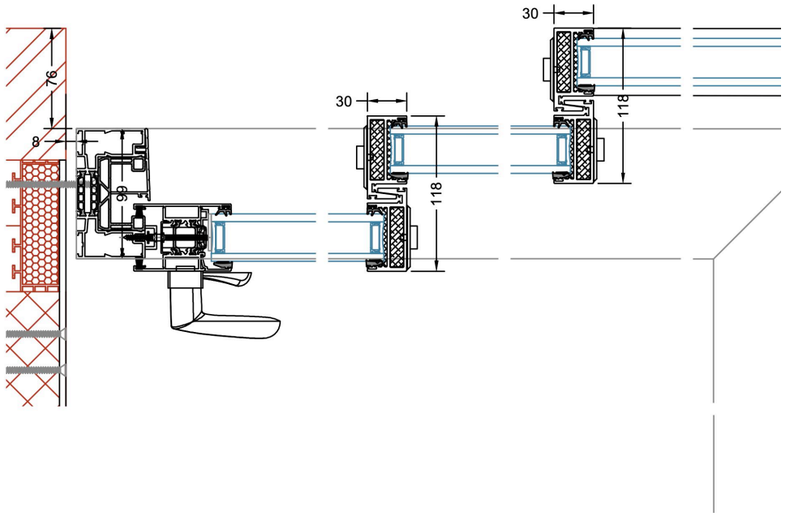

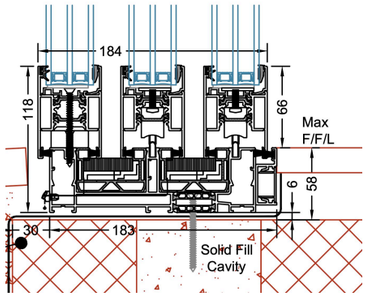

typical section details of
glazing to proposed extension

1:5

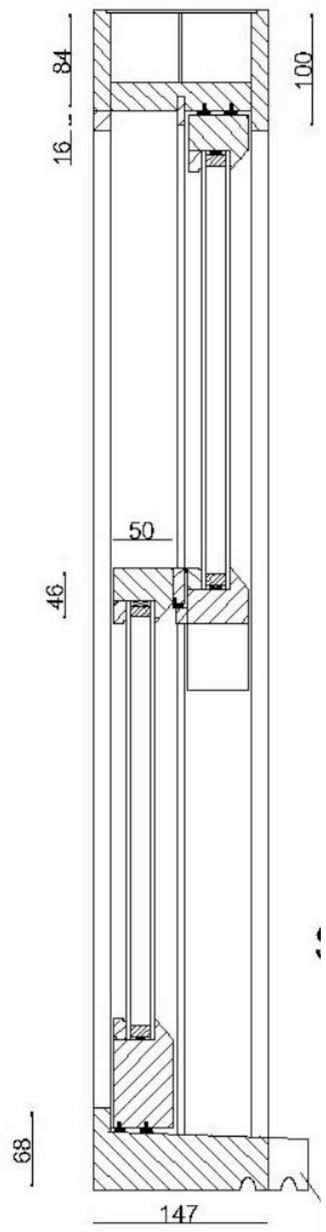

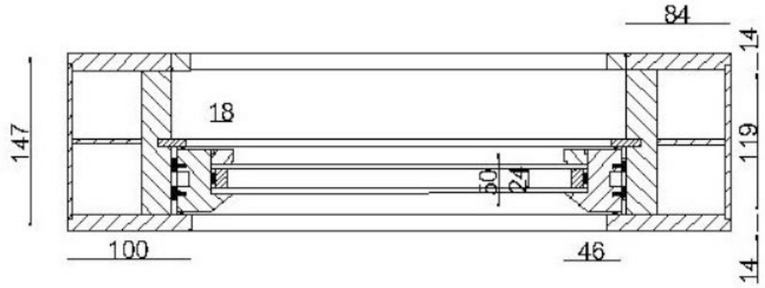

typical section details of
proposed replace,ent sash window,
generally to match existing

1:5

24 SOUTHWICK STREET
TYPICAL WINDOW DETAILS