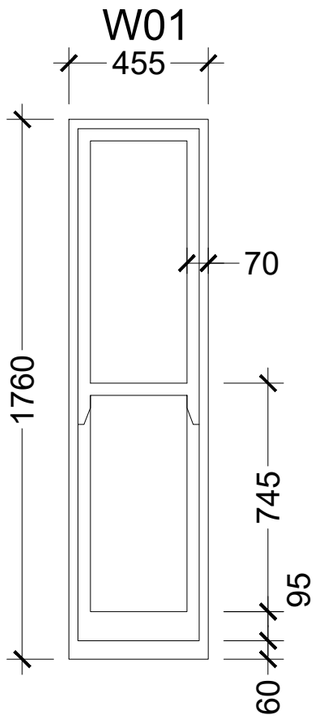

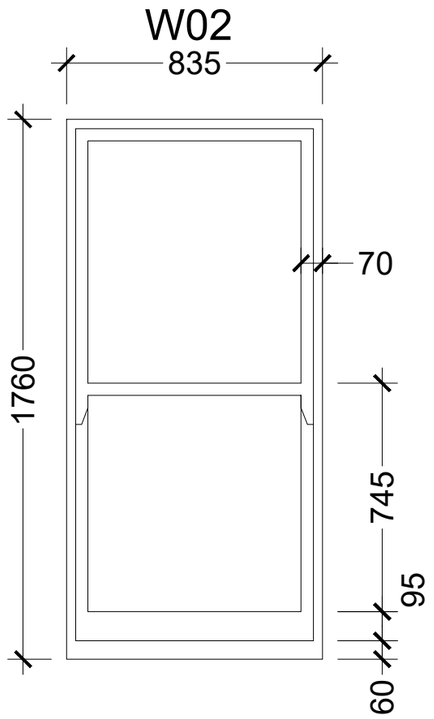

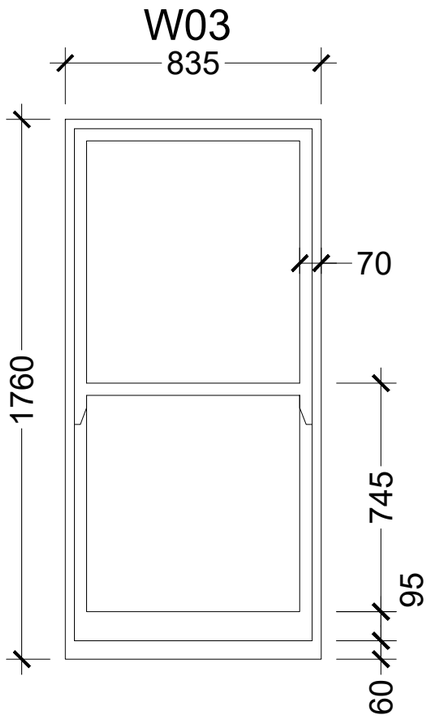

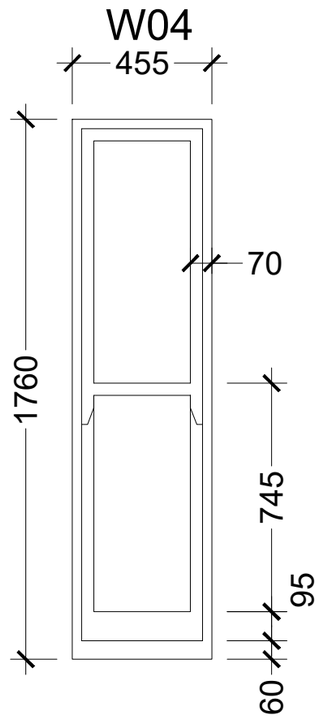

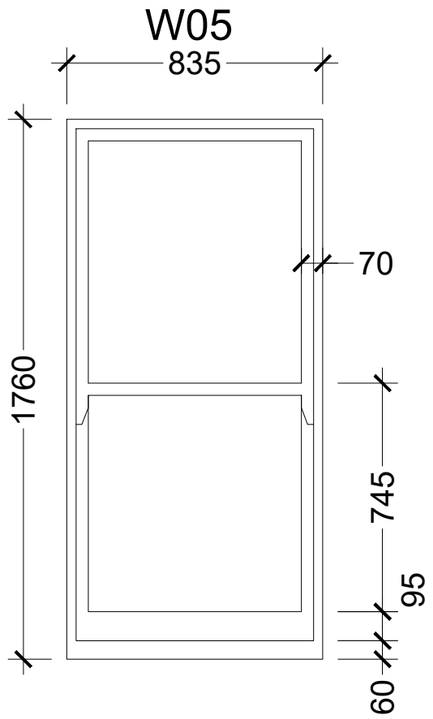

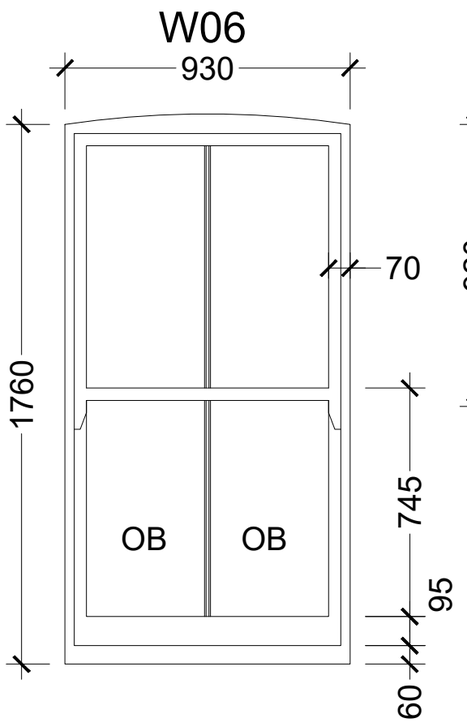

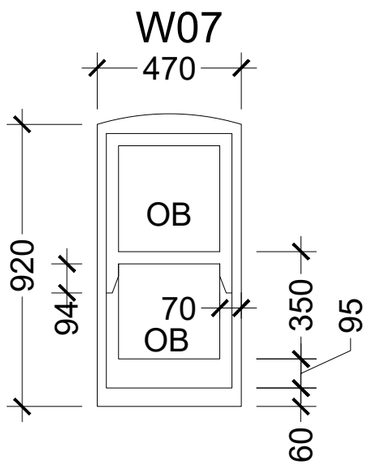

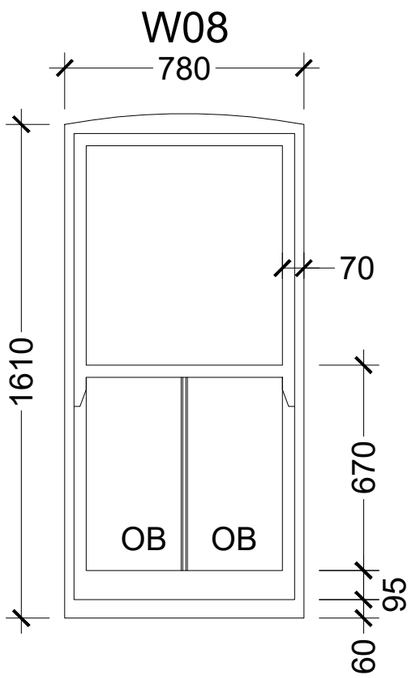

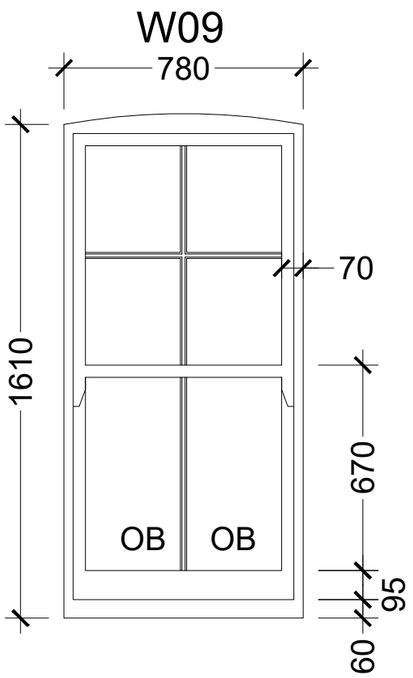

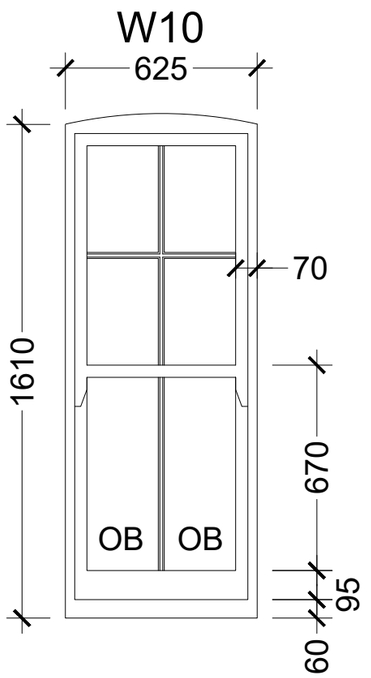

Existing Elevations
1:20@A3

No dimensions to be scaled from drawing except for the purposes of Planning Applications. The contractor should check all dimensions on site. It is the contractors responsibility to ensure compliance with Building Regulations.

CDM 2015 Health & Safety Information

This information relates only to 'Significant Hazards' identified on this drawing and is to be read in conjunction with the Designer's Risk Assessment Register.

General Notes:

Do not scale from this drawing except for planning purposes

All dimensions are to be site checked

Contractor is NOT to order any windows until site measurements have been checked

Contractor assumes all responsibility for ordering correct window sizes.

'OB' refers to obscured glazing

Rev	Date	Revision Details	Dr	Ch
A	09.01.24	Preliminary Issue	NG	NG

GreenJay Architecture
07584041861
ngreen@greenjayarchitecture.com

Client's Name
Mrs Alice Creane

Job Title
Flat 2, 4 Rugby Road, Worthing

Drawing Title
Existing Elevations

Scale
1:20 @ A3

mm 200 400 600 800 1000

Drawn	Checked	Date
NG	NG	09.01.24

Job No	Drawing No	Rev
240109	GA002	A

Status
PRELIMINARY

CAD Plot date: 9/01/2024 - 21:28:49 rugby road.dwg