

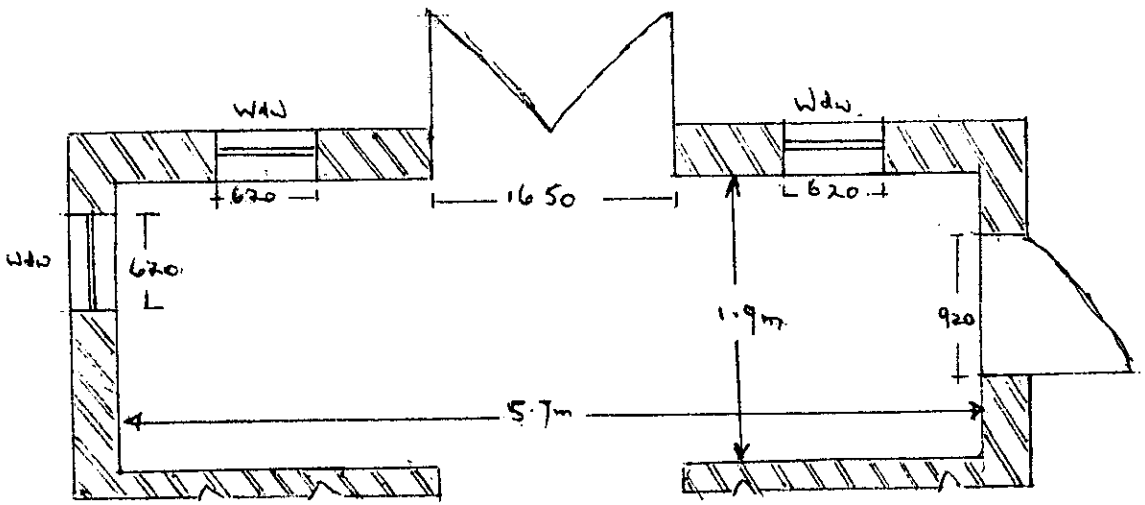

The proposed floor plan is identical to the existing. No proposed changes.

EXISTING FLOOR PLAN OF PORCH.

PROPOSED FLOOR PLAN

ADUR & WORTHING PLANNING SERVICES
PLAN 1081112
DATE VALID - 6 NOV 2012

Scale 1 : 50

Existing and Proposed floor plan.

August 2012

LANCING

METHODIST CHURCH SOUTH STREET LANCING