ALL DRAWINGS TO BE READ IN CONJUNCTION WITH SPECIALIST SUB-CONTRACTORS DETAILS.

DO NOT SCALE FROM THIS DRAWING. ONLY FIGURED DIMENSIONS TO BE USED FOR CONSTRUCTION PURPOSES. ALL DIMENSIONS ARE TO BE CHECKED ON SITE PRIOR TO INSTALLATION AND THE ARCHITECT IS TO BE NOTIFIED OF ANY DISCREPENCIES.

© This drawing is copyright and must not be reproduced without the written consent of the Architect.

REV DATE DESCRIPTION

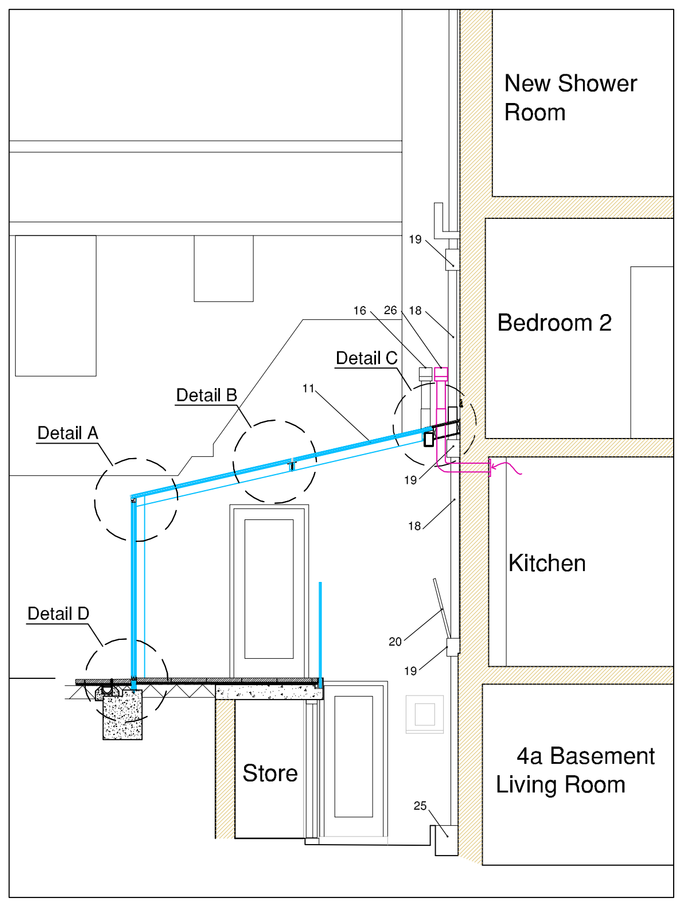


1:50 Section through proposed glass extension

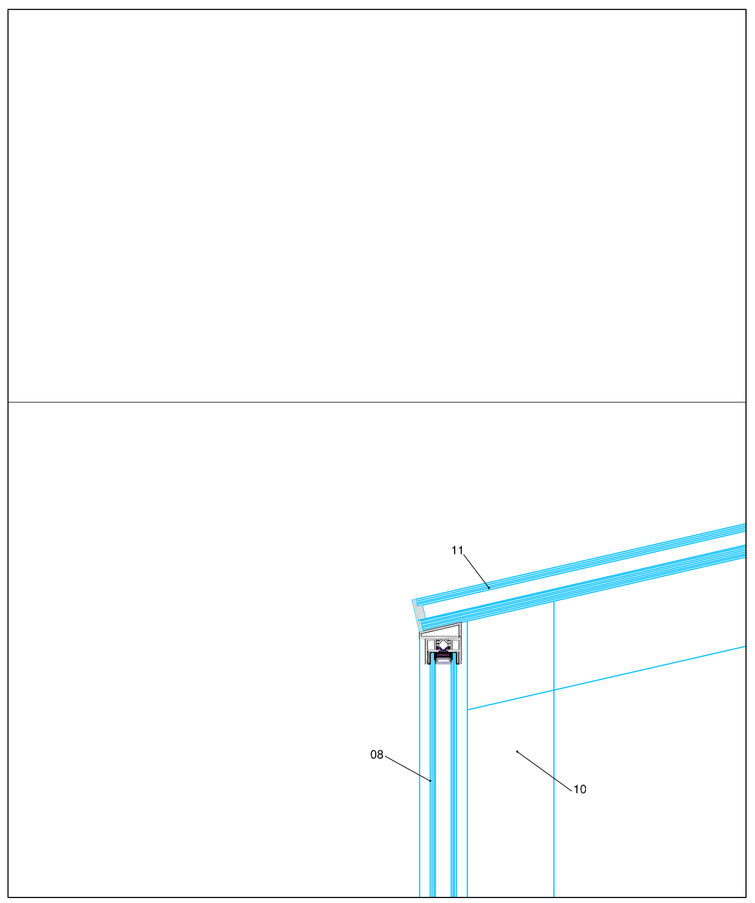


1:5 Section Detail A

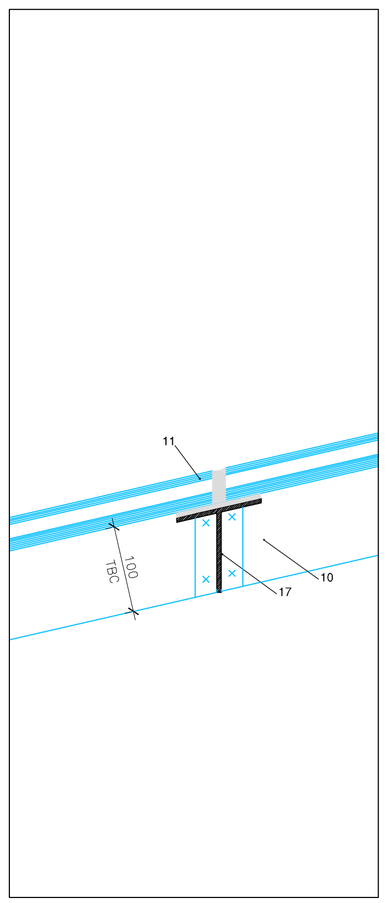


1:5 Section Detail B

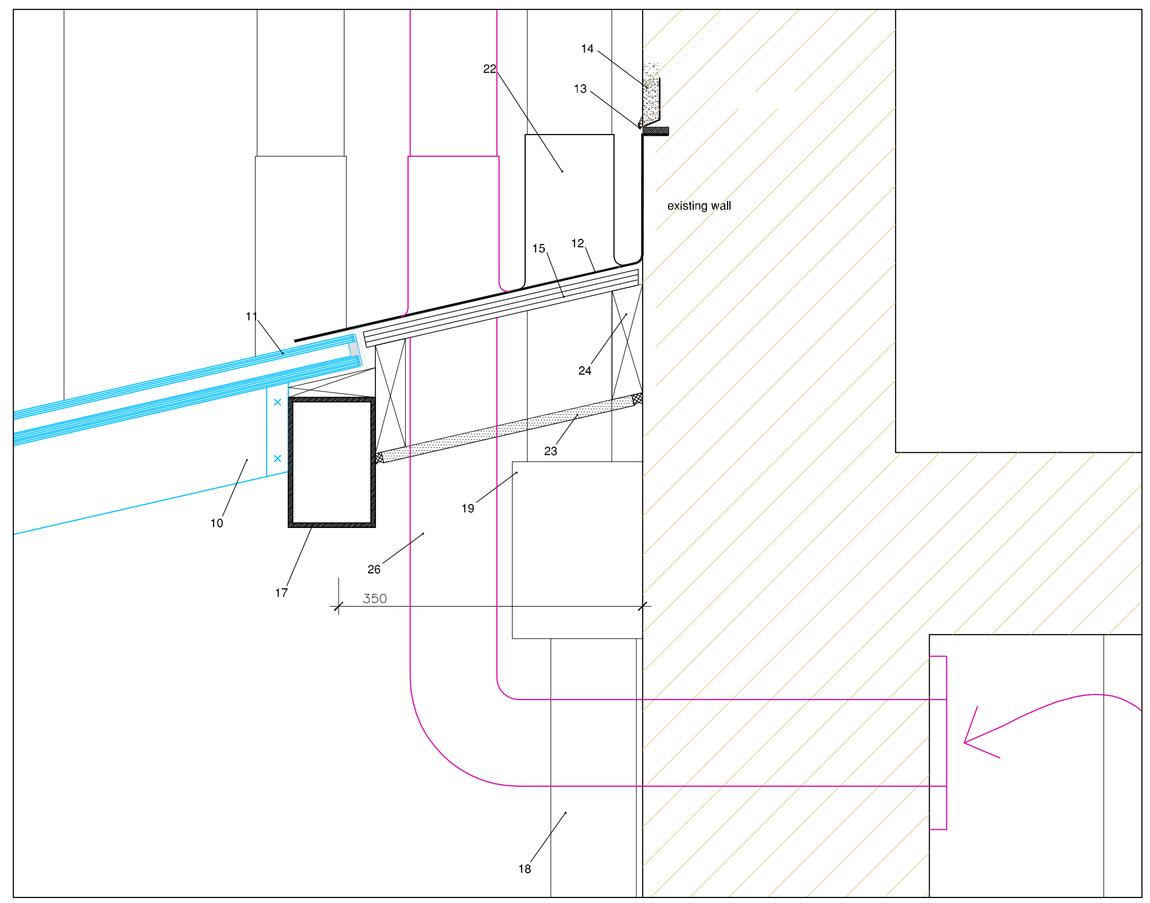


1:5 Section Detail C

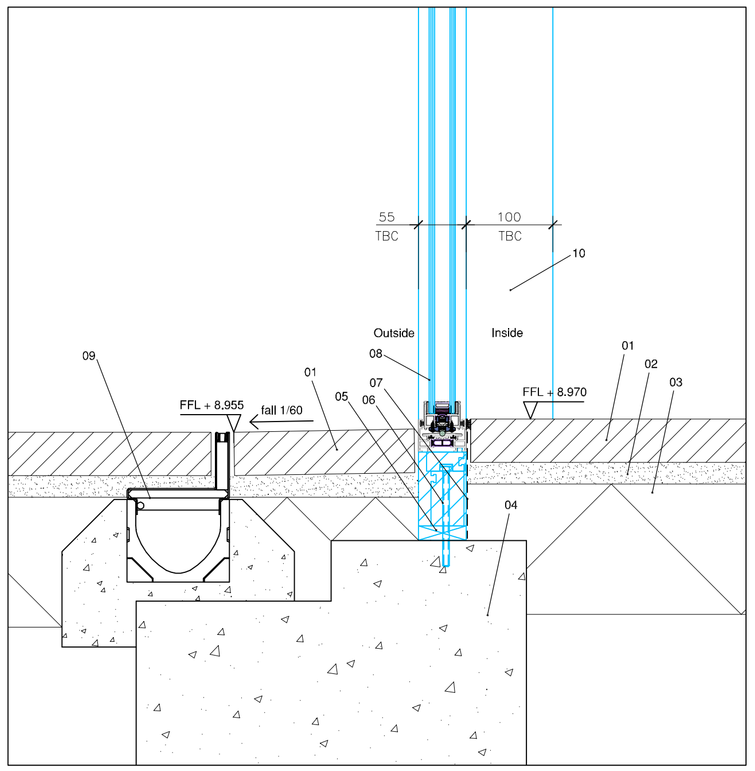


1:5 Section Detail D

| ref | DESCRIPTIONS |
|---|---|
| 01 | 50mm THICK CONCRETE PAVING SLABS |
| 02 | 25mm THICK SAND CEMENT BEDDING |
| 03 | 150mm THICK HARDCORE SUB-BASE |
| 04 | CONCRETE FOUNDATION TO STRUCTURAL ENGINEER'S DETAIL |
| 05 | PACKING TO SPECIALIST MANUFACTURER'S DETAIL |
| 06 | FIXING BOLT TO SPECIALIST MANUFACTURER'S DETAIL |
| 07 | DPC |
| 08 | STRUCTURAL GLASS WALL TO SPECIALIST MANUFACTURER'S DETAIL |
| 09 | LINEAR DRAIN ACO RAINDRAIN BRICKSLOT B 125, OR SIMILAR APPROVED |
| 10 | STRUCTURAL GLASS FIN TO SPECIALIST MANUFACTURER'S DETAIL |
| 11 | FRAMELESS GLASS ROOFLIGHT TO SPECIALIST MANUFACTURER'S DETAIL |
| 12 | CODE 4 LEAD ABUTEMENT FLASHING, TO BE INSTALLED IN ACCORDANCE WITH THE LEAD SHEET MANUAL AND LEAD ASSOCIATION GUIDANCE TO PROVIDE MIN 150mm UPSTAND |
| 13 | GALVANIZED STEEL BEAD FOR EXTERNAL RENDER, EXPAMET 508, OR SIMILAR APPROVED |
| 14 | EXISTING RENDER TO BE RETAINED AND PROTECTED DURING WORKS |
| 15 | 18mm THICK WBP PLYWOOD |
| 16 | NEW BOILER FLUE |
| 17 | STEEL BEAM TO STRUCTURAL ENGINEER'S DETAIL |
| 18 | EXISTING RAIN WATER PIPE TO BE RETAINED |
| 19 | EXISTING HOPPER TO BE RETAINED |
| 20 | EXISTING BOILER CONDENSATION PIPE TO BE RETAINED |
| 21 | - |
| 22 | LEAD FLASHING TO RAIN WATER PIPE |
| 23 | FIBRE CEMENT BOARD |
| 24 | TSW TIMBER BEARER TO STRUCTURAL ENGINEER'S DETAIL |
| 25 | EXISTING GULLY TO BE RETAINED |
| 26 | NEW KITCHEN EXTRACTOR FAN |

PLANNING

4 & 4a Ambrose Place, Worthing — Glass Extension Section Details

**saville jones** | architects

DWG: \\DRAWINGS\PROFORMA\SJA_A1_50.DWG

date: May 2023
scale: as shown @A1

22016 | AL(0-) | 09