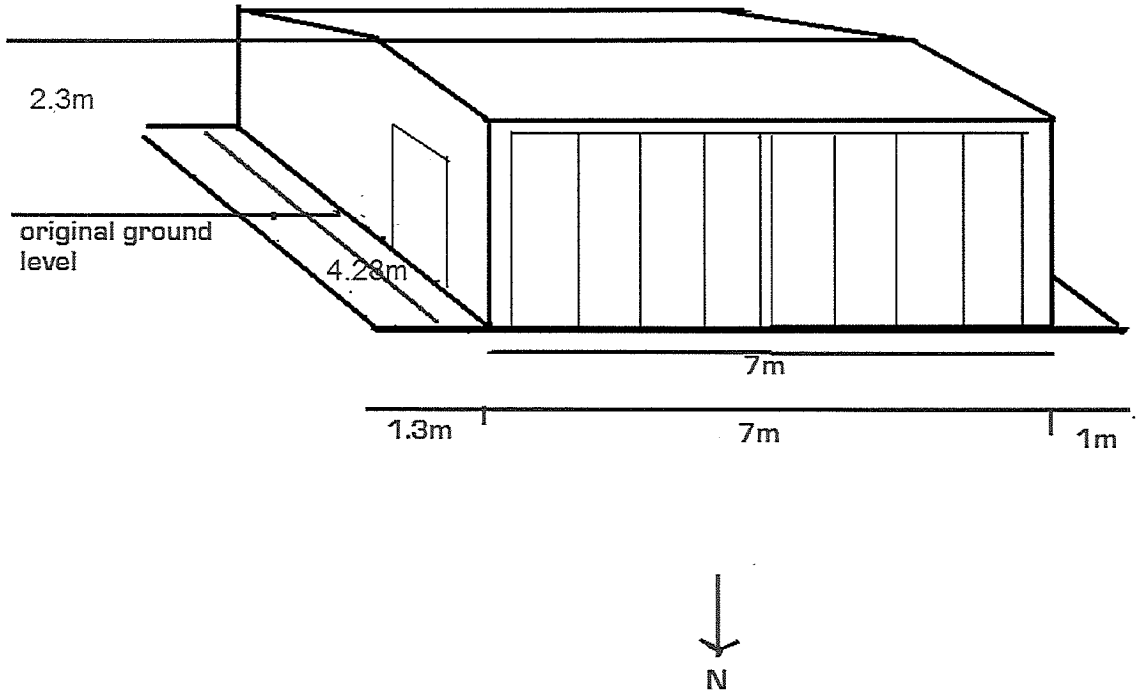

building area 29.96 sqm

building hight 2.3m

building 4.28m x 7m

AMENDMENT

ADUR & WORTHING PLANNING SERVICES

PLAN	AWDM/ 1149/17
DATE VALID	16·11·17

Rec'd