MALT HOUSE MEADOWS PHASE 1,
WEST SOMPTING.

SURFACE WATER DRAINAGE
VERIFICATION REPORT

FOR

PERSIMMON (SOUTH THAMES)

MALT HOUSE MEADOWS PHASE 1, WEST SOMPTING.

SURFACE WATER DRAINAGE VERIFICATION REPORT

for

PERSIMMON (SOUTH THAMES)

Revision	Date of issue	Comments	Prepared By	Checked By
0	15.08.2025	First Issue	AD	SG
A	01.09.2025	Product Information and more photographs added	AD	SG
B	04.05.2026	Updated to include remedial works	AD	SG

Should you have any queries relating to this document please contact:

Anthony Dinsdale
Spoormaker and Partners UK
Ltd
176 Blackamoor Lane
Maidenhead
Berkshire
SL6 8RT
United Kingdom

T: [redacted]
E: [redacted]

Contents

1.0 INTRODUCTION 1
2.0 SURFACE WATER DRAINAGE INFORMATION 2
3.0 VERIFICATION 8
4.0 STATEMENT OF COMPLIANCE 10

Appendices

Appendix A Drainage Construction Drawings 8
Appendix B As-Built Section 38 Sewer Drawings 9
Appendix C Phase 1 Drainage Maintenance Responsibilities Plan 10
Appendix D Surface Water CCTV Survey 11
Appendix E Photographs 12
Appendix F Technical Data Sheets and Product Delivery Notes 13
Appendix G Surface Water Drainage Design Checks Against As-Built Information 14

1.0 INTRODUCTION

1.1 Spoormaker & Partners UK Ltd has been commissioned by Persimmon (Thames Valley) to prepare a Sustainable Drainage Verification Report for installed drainage at Phase1 Malt House Meadows, West Sompting.

1.2 Phase 1 received full planning approval, and the remainder of the site received outline planning approval on 08 August 2023 (Planning Application Reference AWDM/0323/19). Phase 1 comprises 96 houses. Planning Condition 14 within the Decision Notice states the following:

Immediately following implementation of the approved surface water drainage system and prior to occupation of the development, the developer/applicant shall provide the local planning authority with as-built drawings covering each dwelling associated with the implemented scheme together with a completion report prepared by an independent engineer that confirms that the scheme was built in accordance with the approved drawing/s and is fit for purpose. The completion report should clearly identify the individual plot numbers to which the details relate in order to allow these plots to be occupied, whilst other dwellings within the same phase are still under construction. The scheme shall thereafter be maintained in perpetuity.

Reason: To avoid the risk of localised flooding and in the interests of sustainable development having regard to the National Planning Policy Framework and policy 36 of the Adur Local Plan.

1.3 This report has been prepared by Anthony Dinsdale BEng(Hons) CEng MICE AMIHE to discharge Planning Condition 14 and has been carried out in accordance with the Adur and Worthing Councils "Surface Water Drainage Verification Condition Guidance (Version 1.4, 03.05.2022). Anthony Dinsdale (Spoormaker) attended site with David Dawson (Persimmon) on 10/07/25. At the time of inspection, the surface water drainage had already been installed. This report was updated on 04 May 2026 to include the remedial works carried out to rectify defects highlighted in previous revisions.

2.0 SURFACE WATER DRAINAGE INFORMATION

2.1 The Drainage Construction drawings are contained within **Appendix A**.

2.2 All surface water drains into the ground through soakaways and permeable block paving. Private driveways, parking areas, and shared (non-adopted) drive have been constructed from permeable block paving with an open-graded granular sub-base (30% void ratio) to drain rainwater directly to ground. Planning Application AWDM/0323/19 contained a Basic Geotechnical Assessment Report (Ibex Consulting Engineers Ltd, June 2022) which included soakage testing in six soakaway locations and recorded soakage rates between 1.0×10^{-3} m/s and 1.9×10^{-5} m/s. The report concluded that "*conventional soakaways would be suitable for discharging storm water run-off to the ground where more granular soils are encountered.*"

2.3 Each property has its own private surface water system which connects to a silt pit inspection chamber and then to a geo-cellular crate soakaway in the rear garden. Five different sizes of geo-cellular crate soakaway have been used which are as follows:

PRIVATE SOAKAWAY REF.	SOAKAWAY DIMENSIONS
A	1.0m x 1.5m
B	1.5m x 1.5m
C	1.5m x 2.0m
D	2.0m x 2.0m
E	2.0m x 2.5m
F	2.5m x 2.5m

A typical house soakaway detail is shown on drawing 601-180-109 in **Appendix A** and shows Wavin Aquacell Eco crates or similar approved wrapped with a permeable geotextile with a minimum 100mm coarse sand or non-angular granular material base and surround and a silt pit immediately upstream. The detail for the silt pit is shown on drawing 601-180-107 in **Appendix A**. The private soakaways in the rear gardens had already been installed and backfilled at the time of inspection, although there was evidence that Polypipe Polystorm crates had been used to construct the soakaways and the catchpit inspection chambers were inspected (see photographs in **Appendix E**, and product order invoices/technical data sheets in **Appendix F**). The product order invoices/technical data sheets in **Appendix F** show that Wrekin "FasTrack 609" polypropylene woven geotextile was used to wrap the polystorm crates. The Technical Data sheets show that the geotextile has a water permeability of 16 litres / m^2 / second and is therefore suitable for wrapping soakaway crates.

2.3.1 There are four surface water networks draining highway land that has been offered for adoption by the Local Highway Authority under a Section 38 Agreement. Each network drains to a large geo-cellular crate soakaway within the open space to the west. An as-built survey of the Section 38 surface water sewers in contained within **Appendix B**. The as-built survey shows the following information:

- Easting and Northing setting out for manholes, road gullies and the corner of geo-cellular tank soakaways.
- Manhole invert levels.
- Pipe diameters.

- House FFL's.

The as-built survey does not show cover levels and states that "*manhole cover levels and road gully finished heights have been omitted as they are subject to change upon completion of road and soft areas."* A follow-up survey is therefore required to confirm as-built cover levels, although it is not thought that these will vary significantly from the proposed design levels.

2.4 There is a fifth private surface water network to the south of Phase 1 which drains a private road and car park and drains to its own geo-cellular crate soakaway. Each Highway Sewer drains to a Hydro International Downstream Defender to remove pollutants before entering the geo-cellular crate soakaway. The design sizes and levels of the adoptable soakaways are as follows:

Soakaway Ref.	Top of Soakaway Level (mAOD)	Base of Soakaway Level (mAOD)	Soakaway Dimensions (m)	As-Built Top Dimensions (m)
SA01	6.200	5.400	12x20x1.55	12x20
SA02	7.600	6.600	14x11x1.7	14x11
SA03	8.350	7.500	8x12x1.7	8x12
SA04	9.000	7.800	8x8x1.7	8x8

Checking the as-built survey (**Appendix B**) the installed soakaway areas are as per the construction drawings. Although the soakaways had already been built and covered over when the inspection was carried out photographs taken during construction are included in **Appendix** E and the tanks were correctly installed. The product order invoices/technical data sheets in **Appendix F** show that tanks were constructued from Polypipe Polystorm crates and they were wrapped with Wrekin "FasTrack 609" polypropylene woven geotextile.

2.5 The Phase 1 Drainage Maintenance Responsibilities Plan taken from the Phase 1 Surface Water Management and Maintenance Plan (Milestone, June 2024), is contained with **Appendix C**.

2.6 A CCTV survey report and accompanying sewer plans of the installed Section 38 surface water sewers is contained within **Appendix D**, which was undertaken by AB Pipeline Services Ltd on 26 November 2024, 08 January 2025 and 09 January 2025. CCTV video footage was also provided for each run and was reviewed for this report. The CCTV Report generally reflects what is shown on the video footage. All 225mm diameter pipes are recorded as being Vitrified Clay. All 300mm diameter pipes are recorded as being concrete. The sewer network was found to be of good construction with the only comments being as follows:

- In the report all pipes recorded a small amount of water with a diameter loss of 5% or less, except with a 10% to 5% diameter loss in MH 3/05 to DD 3/01 and MH 2/06 to DD 2/01. On the video footage not all pipes contained water. It is possible that it was raining when some of the pipes were surveyed, rather than the pipe sagging.

- An offset joint (medium) between MH 2/06 and Soakaway SA02 (see picture below from video footage). MH 2/06 is the final manhole upstream of soakaway SA02.

The sleeved coupling can be seen bridging the gap, so the pipe should be watertight. This should not affect the pipes performance or future maintenance.

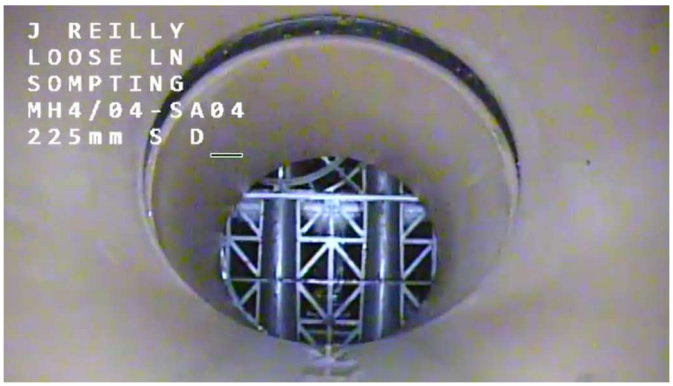

Connection to Soakaway SA02 from MH 2/06 – Medium joint offset.

- Geotextile obstructing 10% of the pipe diameter at the top between MH 4/05 and Soakaway SA04 (see picture below from video footage). MH 4/05 is the manhole downstream of Soakaway SA04 which has been installed for maintenance of the tank and for removing silt jetted through the tank. This defect has subsequently been corrected.



Connection to Soakaway SA04 from MH 4/05 – Geotextile incorrectly fixed taken prior to remedial works.



Connection to Soakaway SA04 from MH 4/05 – taken following remedial works.

- Geotextile obstructing 25% of the pipe diameter between MH 3/05 and Soakaway SA03 (see picture below from video footage). MH 3/05 is the manhole upstream of Soakaway SA03 which conveys surface water to the tank. This defect has subsequently been corrected.



Connection to Soakaway SA03 from MH 3/05 – Geotextile incorrectly fixed, taken prior to remedial works.

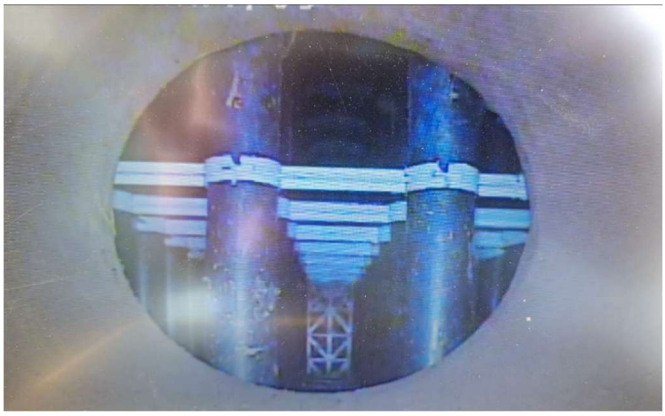

Connection to Soakaway SA03 from MH 3/05 – taken following remedial works.

- Construction drawing 601-130-101 shows that pipe 2.000 between MH 4/02 to MH 4/03 was to be a 225mm diameter ductile iron pipe with Class Z bedding due to the cover being less than 1.2m, but the CCTV Report shows that this pipe is Vitrified Clay. The Contractor subsequently dug a trial pit to show that the pipe was capped with concrete (see below) and was approved by the Highway Authority (WSCC) as this is in accordance with their details.



Concrete protection above Vitrified Clay pipe.

2.7 The Technical Data Sheets and Delivery Notes of the drainage products purchased and installed by the Contractor are contained within **Appendix F**.

2.8 The construction details for permeable block paved shared surfaces (non-adopted), permeable block paved private roads and permeable block paved driveways are shown on drawings 601-180-108 and 601-180-110 contained within **Appendix A**. The details show that the asphalt binder shall be drilled with 75mm diameter holes at 750mm centres and filled with 2/6mm clean stone prior to laying the stone bedding and permeable block paving. The permeable block

paving had already been constructed at the time of inspection on 10 July 2025, and photographs of the finished surfaces are included in **Appendix E**. The contractor has also provided photographs (Appendix E) and product order invoices (Appendix F) showing that the correct Type 3 granular material was used for the sub-base of the permeable pavements and the asphalt bonder was drilled with 75mm holes at 750mm centres as per the construction details.

3.0 VERIFICATION

3.1 **Appendix G** contains a comparison between the construction design information (as contained within **Appendix A**) and the as-built Section 38 drainage survey (as contained within **Appendix B**) and the CCTV survey (as contained within **Appendix C**).

3.2 All installed piped diameters are as per the design drawings.

3.3 From the construction drawings it is not clear what pipe materials were proposed other than pipe 2.000 between manholes MH 4/02 to MH 4/03 which is shown to be a 225mm diameter ductile iron pipe with Class Z bedding due to the cover being less than 1.2m. The CCTV survey shows that all 225mm diameter pipes are Vitrified Clay, and all 300mm diameter pipes are Concrete. The Contractor has subsequently shown that the pipe between MH 4/02 and MH 4/03 was installed with concrete protection which is in accordance with Highway Authority details. The Highway Authority have confirmed that the installation is acceptable. A photograph showing the concrete protection has been included in this report (see 2.6)

3.4 The comparison shows the deviation in Invert Levels between the construction drawings and the as-built survey. Of the 36 No. manholes installed the deviation in accuracy is as follows:

- The IL's 21 No. manholes deviate by ± 0-0.05m.
- The IL's 4 No. manholes deviate by ± 0.05-0.10m.
- The IL's 9 No. manholes deviate by ± 0.10-0.15m.
- The IL's 2 No. manholes deviate by ± 0.15-0.20m.

3.5 The exact length of each pipe has been calculated between centres of manholes using the as-built co-ordinates of the upstream and downstream manholes. The exact gradient has been calculated by dividing the pipe length by the difference between the as-built upstream and downstream manhole invert levels. The pipe velocity has then been calculated using the Colebrook-White formula. Surface Water Sewers should have a velocity of 1.0 m/s to be self-cleansing. Of the 36 No, sewer pipes 8 No. were found to have a velocity > 1.0 m/s although 7 No. of these are above 0.9 m/s and would not impose a risk for increasing maintenance required. Only the 2.8m long pipe between manhole 4/03 and Downstream Defender manhole DD 4/01 has a pipe velocity of less than 0.9 m/s (0.84 m/s). As this is a short section of pipe immediately upstream of the Downstream Defender manhole the risk to increased siltation is minimal.

3.6 Having reviewed the CCTV report and video footage it was found that two connections to Section 38 soakaways had geotextile wrapping incorrectly fixed around the incoming pipe. These defects have now been corrected, and photographs showing the post-remedial works have been included in this report (see 2.6).

3.7 Photographs have been provided showing the installation of the Section 38 Soakaways and setting out co-ordinates provided. From this information the soakaways appear to have been correctly installed to the correct dimensions, however, Technical Data Sheets and Product Order Notes have been provided to confirm the materials used including the geotextile used to wrap the tanks. The materials used are acceptable and suitable.

3.8 As the permeable paved areas were already constructed at the time of the site inspection further evidence was required to show that these pavements were constructed as per the

construction details. The Contractor has provided adequate photographic evidence along with proof of purchase of Type 3 granular subbase material to show that the permeable pavements have been installed as per the construction details.

3.9 Each individual dwelling has a catchpit inspection chamber to intercept debris before surface water drains to a geocellular crate soakaway wrapped with a permeable geotextile. Visual inspection of the chambers shows that they comply with the construction details. Polystorm crates were found on-site, and product orders / photographs show that acceptable materials have been used to construct the soakaways. As the soakaways had already been covered over at the time of inspection the size of each rear garden soakaway could not be verified.

3.10 Photographs and product orders show that the Downstream Defenders purchased and installed comply with the construction specifications and details.

3.11 The remedial works have now been completed, and the installation of SuDS and surface water drainage is good and generally in accordance with the construction details.

4.0 STATEMENT OF COMPLIANCE

This report has been prepared by Anthony Dinsdale BEng(Hons) CEng MICE AMIHE who has over 36 years' experience working in the Construction Industry primarily on drainage and infrastructure design for new residential and mixed-use developments.

Based on the information provided, reviewed and observed on-site I confirm that the contents of this report are correct and is a true reflection of what has been installed on site.



Anthony Dinsdale

Director

Spoormaker and Partners UK Ltd

Dated: 04 May 2026

APPENDIX A

DRAINAGE CONSTRUCTION DRAWINGS

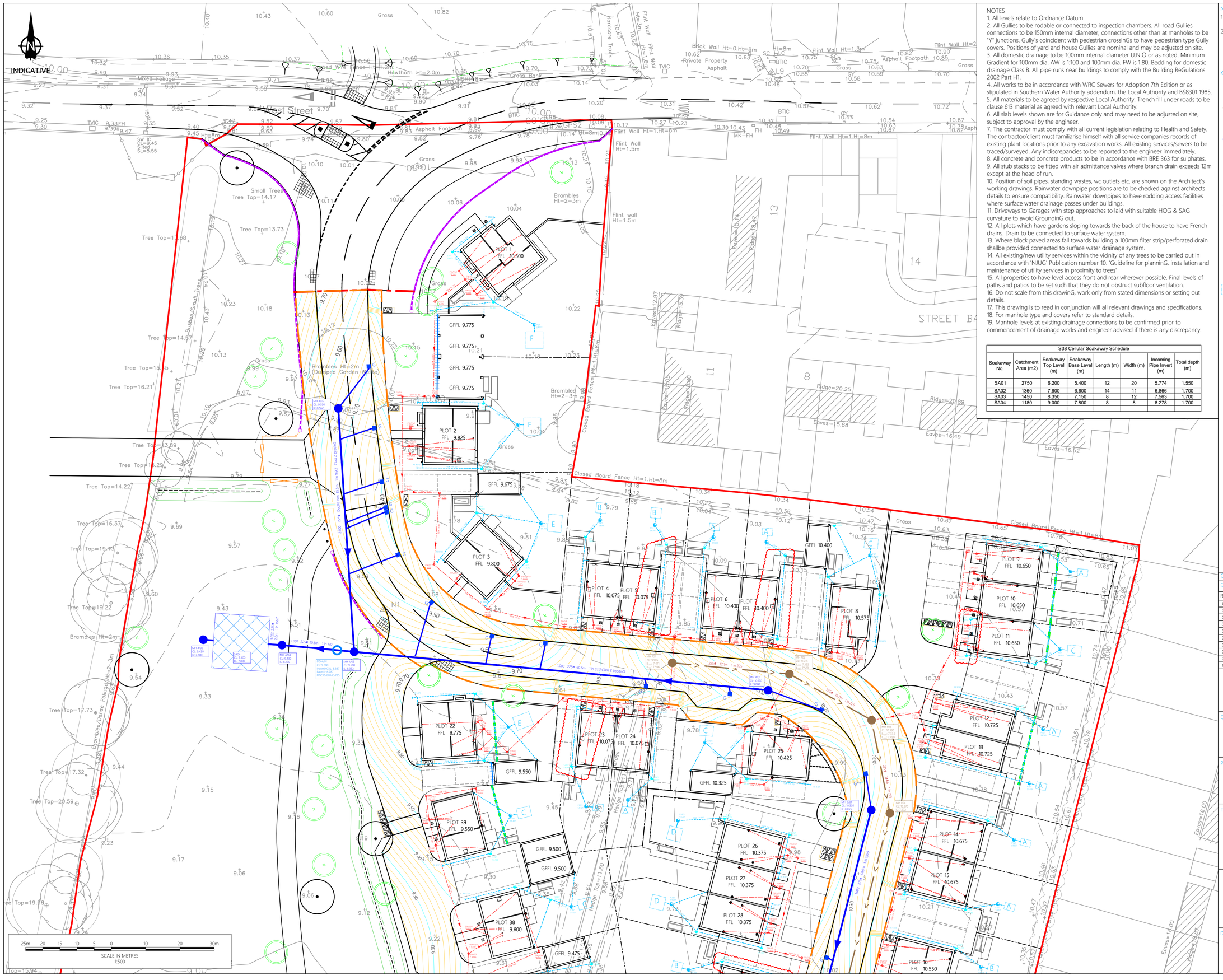

NOTES

1. All levels relate to Ordnance Datum.
2. All Gullies to be rodable or connected to inspection chambers. All road Gullies connections to be 150mm internal diameter, connections other than at manholes to be "Y" junctions. Gully's coincident with pedestrian crossinGs to have pedestrian type Gully covers. Positions of yard and house Gullies are nominal and may be adjusted on site.
3. All domestic drainage to be 100mm internal diameter U.N.O or as noted. Minimum Gradient for 100mm dia. AW is 1:100 and 100mm dia. FW is 1:80. Bedding for domestic drainage Class B. All pipe runs near buildings to comply with the Building ReGulations 2002 Part H1.
4. All works to be in accordance with WRC Sewers for Adoption 7th Edition or as stipulated in Southern Water Authority addendum, the Local Authority and BS8301 1985.
5. All materials to be agreed by respective Local Authority. Trench fill under roads to be clause 613 material as agreed with relevant Local Authority.
6. All slab levels shown are for Guidance only and may need to be adjusted on site, subject to approval by the engineer.
7. The contractor must comply with all current legislation relating to Health and Safety. The contractor/client must familiarise himself with all service companies records of existing plant locations prior to any excavation works. All existing services/sewers to be traced/surveyed. Any indiscrepancies to be reported to the engineer immediately.
8. All concrete and concrete products to be in accordance with BRE 363 for sulphates.
9. All stub stacks to be fitted with air admittance valves where branch drain exceeds 12m except at the head of run.
10. Position of soil pipes, standing wastes, wc outlets etc. are shown on the Architect's working drawings. Rainwater downpipe positions are to be checked against architects details to ensure compatibility. Rainwater downpipes to have rodding access facilities where surface water drainage passes under buildings.
11. Driveways to Garages with step approaches to laid with suitable HOG & SAG curvature to avoid GroundinG out.
12. All plots which have gardens sloping towards the back of the house to have French drains. Drain to be connected to surface water system.
13. Where block paved areas fall towards building a 100mm filter strip/perforated drain shallbe provided connected to surface water drainage system.
14. All existing/new utility services within the vicinity of any trees to be carried out in accordance with 'NJUG' Publication number 10. 'Guideline for planninG, installation and maintenance of utility services in proximity to trees'
15. All properties to have level access front and rear wherever possible. Final levels of paths and patios to be set such that they do not obstruct subfloor ventilation.
16. Do not scale from this drawinG, work only from stated dimensions or setting out details.
17. This drawing is to read in conjunction will all relevant drawings and specifications.
18. For manhoIe type and covers refer to standard details.
19. Manhole levels at existing drainage connections to be confirmed prior to commencement of drainage works and engineer advised if there is any discrepancy.

S38 Cellular Soakaway Schedule

Soakaway No.	Catchment Area (m2)	Soakaway Top Level (m)	Soakaway Base Level (m)	Length (m)	Width (m)	Incoming Pipe Invert (m)	Total depth (m)
SA01	2750	6.200	5.400	12	20	5.774	1.550
SA02	1360	7.600	6.600	14	11	6.866	1.700
SA03	1450	8.350	7.150	8	12	7.563	1.700
SA04	1180	9.000	7.800	8	8	8.278	1.700

Notes

1. Do not scale from this drawing. All dimensions shown are in metres unless noted otherwise.
2. This drawing has been based upon topographical survey information produced by Brunel Surveys Ltd and Milestone Transport Planning cannot be held responsible for any discrepancies which may arise because of it.

KEY

- S104 Adoptable Foul Water Sewer Pipe, Diameter, Material, Gradient and BeddinG
- S104 Adoptable Foul Manhole (1200mm diameter unless stated otherwise)
- S38 Adoptable Highway Drain
- S38 Adoptable Highway Catchpit Manhole to WSCC Std Detail WSCC/278/38/13 (1200mm diameter unless stated otherwise)
- S38 Highway Gully with 150mm Dia Connection Pipe
- S38 Highway Soakaway to WSCC Std Detail WSCC/278/38/34-35
- Foul Drain with Type 3 450mm Internal Dia. Inspection Chamber, Pipe Diameter and Gradient
- Foul Drain with Type 4 250/350mm Internal Dia. Inspection Chamber, Pipe Diameter and Gradient
- Surface Water Drain with Type 3 450mm Internal Dia. Inspection Chamber, Pipe Diameter and Gradient and Invert Level
- Surface Water Rodding Eye and Invert Level
- Surface Water Crate House Soakaway. Refer to standard detail. Maximum depth to invert of crate 1.68m below finished Ground level. Depth of crates shall be 1.2m. Crate plan dimensions as follows: A = 1.0m x 1.5m; B = 1.5m x 1.5m; C = 1.5m x 2.0m; D = 2.0m x 2.0m; E = 2.0m x 2.5m; F = 2.5m x 2.5m
- Aco Drain
- Trench Soakaway with Grass surface at low point in Gardens for Garden surface water run-off
- Silt pit with reference number and pipe invert level
- Hydro International Concrete Downstream Defender Select Advanced Vortex for Unit Reference refer to plan or similar approved.

Ordnance Survey Licence number: 100057360

Drawing Revisions

Rev:	Drn:	Date:	Details	Chk:
C01	BM	16/04/2024	CONSTRUCTION ISSUE	BM
C02	AM	22/04/2024	Minor amendments	BM
C03	AM	03/05/2024	Minor amendments	BM
C04	AM	12/07/2024	Bollards added and bunds amended	BM
C05	BM	21/08/2024	Plot 1 Amended	BM
C06	AM	13/09/2024	Minor amendments	BM
C07	BM	23/09/2024	Minor amendments	BM
C08	LP	05/12/2024	Back Inlet Gullies Added	BM
C09	LP	13/02/2025	Plot 39 FW drainage amended	BM
C10	AM	01/07/2025	Multiple plots RW drainage amdended	BM

Client

Persimmon Homes (Thames Valley) Ltd

Project

West Sompting, West Sussex

Title

Phase 1 Engineering Details - Drainage Layout

MILESTONE TRANSPORT PLANNING
7 Ancells Court, Rye Close, Fleet, Hampshire, GU51 2UY
Tel: 01483 397888
Gateshead IBC, Mulgrave Terrace, Gateshead, NE8 1AN
Tel: 0191 338 7220
web: www.milestonetp.co.uk

Drawing Number: 601-130-101

Scale: 1:250 @ A1

Revision: C10

INDICATIVE

SCALE IN METRES
1:500

Notes
1. Do not scale from this drawing. All dimensions shown are in metres unless noted otherwise.
2. This drawing has been based upon topographical survey information produced by Brunel Surveys Ltd and Milestone Transport Planning cannot be held responsible for any discrepancies which may arise because of it.

KEY

- S104 Adoptable Foul Water Sewer Pipe, Diameter, Material, Gradient and BeddinG
- S104 Adoptable Foul Manhole (1200mm diameter unless stated otherwise)
- S38 Adoptable Highway Drain
- S38 Adoptable Highway Catchpit Manhole to WSCC Std Detail WSCC/278/38/13 (1200mm diameter unless stated otherwise)
- S38 Highway Gully with 150mm Dia Connection Pipe
- S38 Highway Soakaway to WSCC Std Detail WSCC/278/38/34-35
- Foul Drain with Type 3 450mm Internal Dia. Inspection Chamber, Pipe Diameter and Gradient
- Foul Drain with Type 4 250/350mm Internal Dia. Inspection Chamber, Pipe Diameter and Gradient
- Surface Water Drain with Type 3 450mm Internal Dia. Inspection Chamber, Pipe Diameter and Gradient and Invert Level
- Surface Water Rodding Eye and Invert Level
- Surface Water Crate House Soakaway. Refer to standard detail. Maximum depth to invert of crate 1.68m below finished Ground level. Depth of crates shall be 1.2m. Crate plan dimensions as follows: A = 1.0m x 1.5m; B = 1.5m x 1.5m; C = 1.5m x 2.0m; D = 2.0m x 2.0m; E = 2.0m x 2.5m; F = 2.5m x 2.5m
- Aco Drain
- Trench Soakaway with Grass surface at low point in Gardens for Garden surface water run-off
- Silt pit with reference number and pipe invert level
- Hydro International Concrete Downstream Defender Select Advanced Vortex for Unit Reference refer to plan or similar approved.

NOTES
1. All levels relate to Ordnance Datum.
2. All GullieS to be rodable or connected to inspection chambers. All road GullieS connections to be 150mm internal diameter, connections other than at manholes to be "Y" junctions. GullyS coincident with pedestrian crossinGs to have pedestrian type GullyS covers. Positions of yard and house GullieS are nominal and may be adjusted on site.
3. All domestic drainage to be 100mm internal diameter U.N.O or as noted. Minimum Gradient for 100mm dia. AW is 1:100 and 100mm dia. FW is 1:80. Bedding for domestic drainage Class B. All pipe runs near buildings to comply with the Building ReGulations 2002 Part H1.
4. All works to be in accordance with WRC Sewers for Adoption 7th Edition or as stipulated in Southern Water Authority addendum, the Local Authority and BS8301 1985.
5. All materials to be agreed by respective Local Authority. Trench fill under roads to be clause 613 material as agreed with relevant Local Authority.
6. All slab levels shown are for Guidance only and may need to be adjusted on site, subject to approval by the engineer.
7. The contractor must comply with all current legislation relating to Health and Safety. The contractor/client must familiarise himself with all service companies records of existing plant locations prior to any excavation works. All existing services/sewers to be traced/surveyed. Any indiscrepancies to be reported to the engineer immediately.
8. All concrete and concrete products to be in accordance with BRE 363 for sulphates.
9. All stub stacks to be fitted with air admittance valves where branch drain exceeds 12m except at the head of run.
10. Position of soil pipes, standing wastes, wc outlets etc. are shown on the Architect's working drawings. Rainwater downpipe positions are to be checked against architects details to ensure compatibility. Rainwater downpipes to have rodding access facilities where surface water drainage passes under buildings.
11. Driveways to Garages with step approaches to laid with suitable HOG & SAG curvature to avoid GroundinG out.
12. All plots which have gardens sloping towards the back of the house to have French drains. Drain to be connected to surface water system.
13. Where block paved areas fall towards building a 100mm filter strip/perforated drain shallbe provided connected to surface water drainage system.
14. All existing/new utility services within the vicinity of any trees to be carried out in accordance with 'NJUG' Publication number 10. 'Guideline for planninG, installation and maintenance of utility services in proximity to trees'
15. All properties to have level access front and rear wherever possible. Final levels of paths and patios to be set such that they do not obstruct subfloor ventilation.
16. Do not scale from this drawinG, work only from stated dimensions or setting out details.
17. This drawing is to read in conjunction will all relevant drawings and specifications.
18. For manhole type and covers refer to standard details.
19. Manhole levels at existing drainage connections to be confirmed prior to commencement of drainage works and engineer advised if there is any discrepancy.

S38 Cellular Soakaway Schedule

Soakaway No.	Catchment Area (m2)	Soakaway Top Level (m)	Soakaway Base Level (m)	Length (m)	Width (m)	Incoming Pipe Invert (m)	Total depth (m)
SA01	2750	6.200	5.400	12	20	5.774	1.550
SA02	1360	7.600	6.600	14	11	6.866	1.700
SA03	1450	8.350	7.150	8	12	7.563	1.700
SA04	1180	9.000	7.800	8	8	8.278	1.700

Ordnance Survey Licence number: 100057360

Drawing Revisions

Rev:	Drn:	Date:	Details	Chk:
C01	BM	16/04/2024	CONSTRUCTION ISSUE	BM
C02	AM	22/04/2024	Minor amendments	BM
C03	AM	03/05/2024	Minor amendments	BM
C04	AM	12/07/2024	Bollards added and bunds amended	BM
C05	AM	13/09/2024	Minor amendments	BM
C06	AM	17/09/2024	Minor amendments	BM
C07	BM	23/09/2024	Minor amendments	BM
C08	LP	05/12/2024	Back Inlet Gullies Added	BM
C09	AM	01/07/2025	Multiple plots RW drainage amdended	BM
C10	JB	06/08/2025	Fences at Plots 54 and 55 amended	BM

Client
Persimmon Homes (Thames Valley) Ltd

Project
West Sompting, West Sussex

Title
Phase 1 Engineering Details - Drainage Layout

MILESTONE TRANSPORT PLANNING
7 Ancells Court, Rye Close, Fleet, Hampshire, GU51 2UY
Tel: 01483 397888
Gateshead IBC, Mulgrave Terrace, Gateshead, NE8 1AN
Tel: 0191 338 7220
web: www.milestonetp.co.uk

Drawing Number: 601-130-102

Scale: 1:250 @ A1

Revision: C10

INDICATIVE

NOTES
1. All levels relate to Ordnance Datum.
2. All Gullies to be rodable or connected to inspection chambers. All road Gullies connections to be 150mm internal diameter, connections other than at manholes to be "Y" junctions. Gully's coincident with pedestrian crossinGs to have pedestrian type Gully covers. Positions of yard and house Gullies are nominal and may be adjusted on site.
3. All domestic drainage to be 100mm internal diameter U.N.O or as noted. Minimum Gradient for 100mm dia. AW is 1:100 and 100mm dia. FW is 1:80. Bedding for domestic drainage Class B. All pipe runs near buildings to comply with the Building ReGulations 2002 Part H1.
4. All works to be in accordance with WRC Sewers for Adoption 7th Edition or as stipulated in Southern Water Authority addendum, the Local Authority and BS8301 1985.
5. All materials to be agreed by respective Local Authority. Trench fill under roads to be clause 613 material as agreed with relevant Local Authority.
6. All slab levels shown are for Guidance only and may need to be adjusted on site, subject to approval by the engineer.
7. The contractor must comply with all current legislation relating to Health and Safety. The contractor/client must familiarise himself with all service companies records of existing plant locations prior to any excavation works. All existing services/sewers to be traced/surveyed. Any indiscrepancies to be reported to the engineer immediately.
8. All concrete and concrete products to be in accordance with BRE 363 for sulphates.
9. All stub stacks to be fitted with air admittance valves where branch drain exceeds 12m except at the head of run.
10. Position of soil pipes, standing wastes, wc outlets etc. are shown on the Architect's working drawings. Rainwater downpipe positions are to be checked against architects details to ensure compatibility. Rainwater downpipes to have rodding access facilities where surface water drainage passes under buildings.
11. Driveways to Garages with step approaches to laid with suitable HOG & SAG curvature to avoid GroundinG out.
12. All plots which have gardens sloping towards the back of the house to have French drains. Drain to be connected to surface water system.
13. Where block paved areas fall towards building a 100mm filter strip/perforated drain shallbe provided connected to surface water drainage system.
14. All existing/new utility services within the vicinity of any trees to be carried out in accordance with 'NJUG' Publication number 10. 'Guideline for planninG, installation and maintenance of utility services in proximity to trees'
15. All properties to have level access front and rear wherever possible. Final levels of paths and patios to be set such that they do not obstruct subfloor ventilation.
16. Do not scale from this drawinG, work only from stated dimensions or setting out details.
17. This drawing is to read in conjunction will all relevant drawings and specifications.
18. For manhole type and covers refer to standard details.
19. Manhole levels at existing drainage connections to be confirmed prior to commencement of drainage works and engineer advised if there is any discrepancy.

S38 Cellular Soakaway Schedule

Soakaway No.	Catchment Area (m2)	Soakaway Top Level (m)	Soakaway Base Level (m)	Length (m)	Width (m)	Incoming Pipe Invert (m)	Total depth (m)
SA01	2750	6.200	5.400	12	20	5.774	1.550
SA02	1360	7.600	6.600	14	11	6.866	1.700
SA03	1450	8.350	7.150	8	12	7.563	1.700
SA04	1180	9.000	7.800	8	8	8.278	1.700

Maximum size U9 - U10
Mini Soccer Pitch
(54.9m x 36.6m)
Run Off (60.9m x 42.6m)

Maximum size U13 - U14
Community Soccer Pitch
(82m x 50m)
Run Off (88m x 56m)

Sports Pitch drainage to Sports England standards designed by others

25m 20 15 10 5 0 10 20 30m
SCALE IN METRES
1:500

Notes
1. Do not scale from this drawing. All dimensions shown are in metres unless noted otherwise.
2. This drawing has been based upon topographical survey information produced by Brunel Surveys Ltd and Milestone Transport Planning cannot be held responsible for any discrepancies which may arise because of it.

KEY
- S104 Adoptable Foul Water Sewer Pipe, Diameter, Material, Gradient and BeddinG
- S104 Adoptable Foul Manhole (1200mm diameter unless stated otherwise)
- S38 Adoptable Highway Drain
- S38 Adoptable Highway Catchpit Manhole to WSCC Std Detail WSCC/278/38/13 (1200mm diameter unless stated otherwise)
- S38 Highway Gully with 150mm Dia Connection Pipe
- S38 Highway Soakaway to WSCC Std Detail WSCC/278/38/34-35
- Foul Drain with Type 3 450mm Internal Dia. Inspection Chamber, Pipe Diameter and Gradient
- Foul Drain with Type 4 250/350mm Internal Dia. Inspection Chamber, Pipe Diameter and Gradient
- Surface Water Drain with Type 3 450mm Internal Dia. Inspection Chamber, Pipe Diameter and Gradient and Invert Level
- Surface Water Rodding Eye and Invert Level
- Surface Water Crate House Soakaway. Refer to standard detail. Maximum depth to invert of crate 1.68m below finished Ground level. Depth of crates shall be 1.2m. Crate plan dimensions as follows: A = 1.0m x 1.5m; B = 1.5m x 1.5m; C = 1.5m x 2.0m; D = 2.0m x 2.0m; E = 2.0m x 2.5m; F = 2.5m x 2.5m
- Aco Drain
- Trench Soakaway with Grass surface at low point in Gardens for Garden surface water run-off
- Silt pit with reference number and pipe invert level
- Hydro International Concrete Downstream Defender Select Advanced Vortex for Unit Reference refer to plan or similar approved.

Ordnance Survey Licence number: 100057360

Drawing Revisions

Rev:	Drn:	Date:	Details	Chk:
C01	BM	16/04/2024	CONSTRUCTION ISSUE	BM
C02	AM	22/04/2024	Minor amendments	BM
C03	AM	03/05/2024	Minor amendments	BM
C04	AM	24/06/2024	Minor amendments	BM
C05	AM	12/07/2024	Bollards added and bunds amended	BM
C06	AM	13/09/2024	Minor amendments	BM
C07	AM	17/09/2024	Minor amendments	BM
C08	BM	23/09/2024	Minor amendments	BM
C09	LP	05/12/2024	Back Inlet Gullies Added	BM
C10	AM	01/07/2025	Multiple plots RW drainage amdended	BM
C11	JB	06/08/2025	Fences at Plots 54, 55, 66, 67 amended	BM

Client
Persimmon Homes (Thames Valley) Ltd

Project
West Sompting, West Sussex

Title
Phase 1 Engineering Details - Drainage Layout

MILESTONE TRANSPORT PLANNING
7 Ancells Court, Rye Close, Fleet, Hampshire, GU51 2UY
Tel: 01483 397888
Gateshead IBC, Mulgrave Terrace, Gateshead, NE8 1AN
Tel: 0191 338 7220
web: www.milestonetp.co.uk

Drawing Number: 601-130-103
Scale: 1:250 @ A1
Revision: C11

INDICATIVE

Maximum size U13 - U14
Community Soccer Pitch
(82m x 50m)
Run Off (88m x 56m)

Sports Pitch drainage to Sports England standards designed by others.

25m 20 15 10 5 0 10 20 30m
SCALE IN METRES
1:500

Notes
1. Do not scale from this drawing. All dimensions shown are in metres unless noted otherwise.
2. This drawing has been based upon topographical survey information produced by Brunel Surveys Ltd and Milestone Transport Planning cannot be held responsible for any discrepancies which may arise because of it.

KEY

- S104 Adoptable Foul Water Sewer Pipe, Diameter, Material, Gradient and BeddinG
- S104 Adoptable Foul Manhole (1200mm diameter unless stated otherwise)
- S38 Adoptable Highway Drain
- S38 Adoptable Highway Catchpit Manhole to WSCC Std Detail WSCC/278/38/13 (1200mm diameter unless stated otherwise)
- G** S38 Highway Gully with 150mm Dia Connection Pipe
- S38 Highway Soakaway to WSCC Std Detail WSCC/278/38/34-35
- Foul Drain with Type 3 450mm Internal Dia. Inspection Chamber, Pipe Diameter and Gradient
- Foul Drain with Type 4 250/350mm Internal Dia. Inspection Chamber, Pipe Diameter and Gradient
- Surface Water Drain with Type 3 450mm Internal Dia. Inspection Chamber, Pipe Diameter and Gradient and Invert Level
- Surface Water Rodding Eye and Invert Level
- B Surface Water Crate House Soakaway. Refer to standard detail. Maximum depth to invert of crate 1.68m below finished Ground level. Depth of crates shall be 1.2m. Crate plan dimensions as follows: A = 1.0m x 1.5m; B = 1.5m x 1.5m; C = 1.5m x 2.0m; D = 2.0m x 2.0m; E = 2.0m x 2.5m; F = 2.5m x 2.5m
- Aco Drain
- Trench Soakaway with Grass surface at low point in Gardens for Garden surface water run-off
- P4SVT S# ### Silt pit with reference number and pipe invert level
- DDV/** Hydro International Concrete Downstream Defender Select Advanced Vortex for Unit Reference refer to plan or similar approved.

NOTES
1. All levels relate to Ordnance Datum.
2. All Gullies to be rodable or connected to inspection chambers. All road Gullies connections to be 150mm internal diameter, connections other than at manholes to be "Y" junctions. Gully's coincident with pedestrian crossinGs to have pedestrian type Gully covers. Positions of yard and house Gullies are nominal and may be adjusted on site.
3. All domestic drainage to be 100mm internal diameter U.N.O or as noted. Minimum Gradient for 100mm dia. AW is 1:100 and 100mm dia. FW is 1:80. Bedding for domestic drainage Class B. All pipe runs near buildings to comply with the Building ReGulations 2002 Part H1.
4. All works to be in accordance with WRC Sewers for Adoption 7th Edition or as stipulated in Southern Water Authority addendum, the Local Authority and BS8301 1985.
5. All materials to be agreed by respective Local Authority. Trench fill under roads to be clause 613 material as agreed with relevant Local Authority.
6. All slab levels shown are for Guidance only and may need to be adjusted on site, subject to approval by the engineer.
7. The contractor must comply with all current legislation relating to Health and Safety. The contractor/client must familiarise himself with all service companies records of existing plant locations prior to any excavation works. All existing services/sewers to be traced/surveyed. Any indiscrepancies to be reported to the engineer immediately.
8. All concrete and concrete products to be in accordance with BRE 363 for sulphates.
9. All stub stacks to be fitted with air admittance valves where branch drain exceeds 12m except at the head of run.
10. Position of soil pipes, standing wastes, wc outlets etc. are shown on the Architect's working drawings. Rainwater downpipe positions are to be checked against architects details to ensure compatibility. Rainwater downpipes to have rodding access facilities where surface water drainage passes under buildings.
11. Driveways to Garages with step approaches to laid with suitable HOG & SAG curvature to avoid GroundinG out.
12. All plots which have gardens sloping towards the back of the house to have French drains. Drain to be connected to surface water system.
13. Where block paved areas fall towards building a 100mm filter strip/perforated drain shallbe provided connected to surface water drainage system.
14. All existing/new utility services within the vicinity of any trees to be carried out in accordance with 'NJUG' Publication number 10. 'Guideline for planninG, installation and maintenance of utility services in proximity to trees'
15. All properties to have level access front and rear wherever possible. Final levels of paths and patios to be set such that they do not obstruct subfloor ventilation.
16. Do not scale from this drawinG, work only from stated dimensions or setting out details.
17. This drawing is to read in conjunction will all relevant drawings and specifications.
18. For manhole type and covers refer to standard details.
19. Manhole levels at existing drainage connections to be confirmed prior to commencement of drainage works and engineer advised if there is any discrepancy.

S38 Cellular Soakaway Schedule

Soakaway No.	Catchment Area (m2)	Soakaway Top Level (m)	Soakaway Base Level (m)	Length (m)	Width (m)	Incoming Pipe Invert (m)	Total depth (m)
SA01	2750	6.200	5.400	12	20	5.774	1.550
SA02	1360	7.600	6.600	14	11	6.866	1.700
SA03	1450	8.350	7.150	8	12	7.563	1.700
SA04	1180	9.000	7.800	8	8	8.278	1.700

Ordnance Survey Licence number: 100057360

Drawing Revisions

Rev:	Drn:	Date:	Details	Chk:
C01	BM	16/04/2024	CONSTRUCTION ISSUE	BM
C02	AM	22/04/2024	Minor amendments	BM
C03	AM	03/05/2024	Minor amendments	BM
C04	AM	12/07/2024	Bollards added and bunds amended	BM
C05	AM	13/09/2024	Minor amendments	BM
C06	AM	17/09/2024	Minor amendments	BM
C07	AM	20/09/2024	Minor amendments	BM
C08	LP	05/12/2024	Back Inlet Gullies Added	BM
C09	AM	01/07/2025	Multiple plots RW drainage amdended	BM

Client
Persimmon Homes (Thames Valley) Ltd

Project
West Sompting, West Sussex

Title
Phase 1 Engineering Details - Drainage Layout

MILESTONE TRANSPORT PLANNING
7 Ancells Court, Rye Close, Fleet, Hampshire, GU51 2UY
Tel: 01483 397888
Gateshead IBC, Mulgrave Terrace, Gateshead, NE8 1AN
Tel: 0191 338 7220
web: www.milestonetp.co.uk

Drawing Number: 601-130-104
Scale: 1:250 @ A1
Revision: C09

INDICATIVE

ExFWMH 5813
CL: 9.05
IL: 5.458

ExFWMH 6703
CL: 9.49
IL: 4.986

Sylvan Road

Loose Lane

Chain Link Fence Ht=1.5m (Barbed Wire On Top)

Chain Link Fence Ht=1.Ht=8m (Barb Wire In Top)

Ridge=13.03
Eaves=11.12

Tree Top=18.27

Tree Top=18.52

PLOT 61 FFL 8.375
PLOT 62 FFL 7.975
PLOT 72 FFL 7.925
PLOT 73 FFL 7.925
PLOT 74 FFL 8.125
PLOT 75 FFL 8.125
PLOT 76 FFL 8.250
PLOT 77 FFL 8.250
PLOT 78 FFL 8.250
PLOT 79 FFL 8.775
PLOT 80 FFL 8.675
PLOT 81 FFL 8.675
PLOT 82 FFL 8.350
PLOT 83 FFL 8.450
PLOT 84 FFL 8.725
PLOT 85 FFL 8.725
PLOT 86 FFL 8.850
PLOT 87 FFL 8.800
PLOT 88 FFL 8.800
PLOT 89 FFL 8.800
PLOT 90 FFL 8.800
PLOT 91 FFL 8.875
PLOT 92 FFL 8.875
PLOT 93 FFL 8.825
PLOT 94 FFL 8.825
PLOT 95 FFL 8.800
PLOT 96 FFL 8.575

GFFL 7.775
GFFL 8.225
GFFL 8.300
GFFL 8.700
GFFL 8.600
GFFL 8.550
GFFL 8.550

N1 N2 N3 N4 N5 N6 N7 N8

25m 20 15 10 5 0 10 20 30m
SCALE IN METRES
1:500

Notes

1. Do not scale from this drawing. All dimensions shown are in metres unless noted otherwise.
2. This drawing has been based upon topographical survey information produced by Brunel Surveys Ltd and Milestone Transport Planning cannot be held responsible for any discrepancies which may arise because of it.

KEY

- S104 Adoptable Foul Water Sewer Pipe, Diameter, Material, Gradient and BeddinG
- S104 Adoptable Foul Manhole (1200mm diameter unless stated otherwise)
- S38 Adoptable Highway Drain
- S38 Adoptable Highway Catchpit Manhole to WSCC Std Detail WSCC/278/38/13 (1200mm diameter unless stated otherwise)
- G** S38 Highway Gully with 150mm Dia Connection Pipe
- S38 Highway Soakaway to WSCC Std Detail WSCC/278/38/34-35
- Foul Drain with Type 3 450mm Internal Dia. Inspection Chamber, Pipe Diameter and Gradient
- Foul Drain with Type 4 250/350mm Internal Dia. Inspection Chamber, Pipe Diameter and Gradient
- Surface Water Drain with Type 3 450mm Internal Dia. Inspection Chamber, Pipe Diameter and Gradient and Invert Level
- Surface Water Rodding Eye and Invert Level
- B Surface Water Crate House Soakaway. Refer to standard detail. Maximum depth to invert of crate 1.68m below finished Ground level. Depth of crates shall be 1.2m. Crate plan dimensions as follows: A = 1.0m x 1.5m; B = 1.5m x 1.5m; C = 1.5m x 2.0m; D = 2.0m x 2.0m; E = 2.0m x 2.5m; F = 2.5m x 2.5m
- Aco Drain
- Trench Soakaway with Grass surface at low point in Gardens for Garden surface water run-off
- P401 SA ### Silt pit with reference number and pipe invert level
- DD/** Hydro International Concrete Downstream Defender Select Advanced Vortex for Unit Reference refer to plan or similar approved.

NOTES

1. All levels relate to Ordnance Datum.
2. All Gullies to be rodable or connected to inspection chambers. All road Gullies connections to be 150mm internal diameter, connections other than at manholes to be "Y" junctions. Gully's coincident with pedestrian crossinGs to have pedestrian type Gully covers. Positions of yard and house Gullies are nominal and may be adjusted on site.
3. All domestic drainage to be 100mm internal diameter U.N.O or as noted. Minimum Gradient for 100mm dia. AW is 1:100 and 100mm dia. FW is 1:80. Bedding for domestic drainage Class B. All pipe runs near buildings to comply with the Building ReGulations 2002 Part H1.
4. All works to be in accordance with WRC Sewers for Adoption 7th Edition or as stipulated in Southern Water Authority addendum, the Local Authority and BS8301 1985.
5. All materials to be agreed by respective Local Authority. Trench fill under roads to be clause 613 material as agreed with relevant Local Authority.
6. All slab levels shown are for Guidance only and may need to be adjusted on site, subject to approval by the engineer.
7. The contractor must comply with all current legislation relating to Health and Safety. The contractor/client must familiarise himself with all service companies records of existing plant locations prior to any excavation works. All existing services/sewers to be traced/surveyed. Any indiscrepancies to be reported to the engineer immediately.
8. All concrete and concrete products to be in accordance with BRE 363 for sulphates.
9. All stub stacks to be fitted with air admittance valves where branch drain exceeds 12m except at the head of run.
10. Position of soil pipes, standing wastes, wc outlets etc. are shown on the Architect's working drawings. Rainwater downpipe positions are to be checked against architects details to ensure compatibility. Rainwater downpipes to have rodding access facilities where surface water drainage passes under buildings.
11. Driveways to Garages with step approaches to laid with suitable HOG & SAG curvature to avoid GroundinG out.
12. All plots which have gardens sloping towards the back of the house to have French drains. Drain to be connected to surface water system.
13. Where block paved areas fall towards building a 100mm filter strip/perforated drain shallbe provided connected to surface water drainage system.
14. All existing/new utility services within the vicinity of any trees to be carried out in accordance with 'NJUG' Publication number 10. 'Guideline for planninG, installation and maintenance of utility services in proximity to trees'
15. All properties to have level access front and rear wherever possible. Final levels of paths and patios to be set such that they do not obstruct subfloor ventilation.
16. Do not scale from this drawinG, work only from stated dimensions or setting out details.
17. This drawing is to read in conjunction will all relevant drawings and specifications.
18. For manhole type and covers refer to standard details.
19. Manhole levels at existing drainage connections to be confirmed prior to commencement of drainage works and engineer advised if there is any discrepancy.

S38 Cellular Soakaway Schedule

Soakaway No.	Catchment Area (m2)	Soakaway Top Level (m)	Soakaway Base Level (m)	Length (m)	Width (m)	Incoming Pipe Invert (m)	Total depth (m)
SA01	2750	6.200	5.400	12	20	5.774	1.550
SA02	1360	7.600	6.600	14	11	6.866	1.700
SA03	1450	8.350	7.150	8	12	7.563	1.700
SA04	1180	9.000	7.800	8	8	8.278	1.700

Ordnance Survey Licence number: 100057360

Drawing Revisions

Rev:	Drn:	Date:	Details	Chk:
C01	BM	16/04/2024	CONSTRUCTION ISSUE	BM
C02	AM	22/04/2024	Minor amendments	BM
C03	AM	13/09/2024	Minor amendments	BM
C04	LP	05/12/2024	Back Inlet Gullies Added	BM
C05	BM	06/06/2025	S104 MH F30 & F31 Amended	BM
C06	AM	01/07/2025	Multiple plots RW drainage amdended	BM

Client
Persimmon Homes (Thames Valley) Ltd

Project
West Sompting, West Sussex

Title
Phase 1 Engineering Details - Drainage Layout

MILESTONE TRANSPORT PLANNING
7 Ancells Court, Rye Close, Fleet, Hampshire, GU51 2UY
Tel: 01483 397888
Gateshead IBC, Mulgrave Terrace, Gateshead, NE8 1AN
Tel: 0191 338 7220
web: www.milestonetp.co.uk

Drawing Number: 601-130-105

Scale: 1:250 @ A1

Revision: C06

S38 Adoptable highway manhole schedule

Manhole Name	Cover Level (m)	MH Depth (m)	Catchpit Type	Manhole Diam.,L*W (mm)	Pipe Out PN	Pipe Out Invert Level (m)	Pipe Out Diameter (mm)	Pipes In PN	Pipes In Invert Level (m)	Pipes In Diameter (mm)	Pipes In Backdrop (mm)	Manhole Easting (m)	Manhole Northing (m)
MH1/01	8.475	1.800	Type B	1200	1.000	7.125	225					516503.128	104744.142
MH1/02	8.360	1.801	Type B	1200	1.001	7.009	225	1.000	7.009	225		516483.438	104743.187
MH1/03	8.150	1.80	Type B	1200	1.002	6.802	300	1.001	6.877	225		516461.229	104746.684
MH1/04	8.540	2.467	Type B	1200	1.003	6.523	300	1.002	6.523	300		516469.051	104790.916
MH1/05	8.518	2.5	Type B	1200	1.004	6.468	300	1.003	6.468	300		516465.801	104799.628
MH1/06	8.435	2.474	Type B	1200	1.006	6.411	300	1.004	6.411	300		516457.645	104804.113
MH1/07	8.090	2.264	Type B	1200	1.007	6.276	300	1.005	6.276	300		516434.685	104806.381
MH1/08	8.145	1.900	Type B	1200	2.000	6.695	225					516416.197	104841.583
MH1/09	7.850	2.162	Type B	1200	1.007	6.138	300	1.006	6.138	300		516411.541	104809.977
								2.000	6.228	225			
MH1/10	7.735	2.172	Type B	1200	1.008	6.013	300	1.007	6.013	300		516401.166	104807.985
MH1/11	7.450	2.014	Type B	1200	1.009	5.886	300	1.008	5.886	300		516375.954	104811.951
MH1/12	7.240	1.922	Type B	1200	1.010	5.768	300	1.09	5.768	300		516352.944	104817.657
MH1/13	7.015	1.749	Type B	1200	1.011	5.716	300	1.010	5.716	300		516345.994	104823.252
MH1/14	6.900	2.350	Type B	1200		5.400	300					516330.956	104827.008

SCHEDULE FOR HIGHWAY DRAINAGE NETWORK SERVING SOAKAWAY SA02

Manhole Name	Cover Level (m)	MH Depth (m)	Catchpit Type	Manhole Diam.,L*W (mm)	Pipe Out PN	Pipe Out Invert Level (m)	Pipe Out Diameter (mm)	Pipes In PN	Pipes In Invert Level (m)	Pipes In Diameter (mm)	Pipes In Backdrop (mm)	Manhole Easting (m)	Manhole Northing (m)
MH2/01	9.490	1.900	Type B	1200	1.000	8.040	225					516442.052	104949.643
MH2/02	9.230	1.900	Type B	1200	1.001	7.780	225	1.000	7.780	225		516434.820	104929.282
MH2/03	8.865	1.745	Type B	1200	1.002	7.570	225	1.001	7.570	225		516430.123	104900.331
MH2/04	8.570	1.710	Type B	1200	1.003	7.310	225	1.002	7.310	225		516424.133	104876.960
MH2/05	8.270	1.719	Type B	1200	1.004	7.001	225	1.003	7.001	225		516374.183	104891.528
MH2/06	8.100	2.123	Type B	1200	1.005	6.877	225	1.004	6.877	225		516354.119	104897.380
MH2/07	8.300	2.350	Type B	1200		6.400	225					516357.272	104910.300

SCHEDULE FOR HIGHWAY DRAINAGE NETWORK SERVING SOAKAWAY SA03

Manhole Name	Cover Level (m)	MH Depth (m)	Catchpit Type	Manhole Diam.,L*W (mm)	Pipe Out PN	Pipe Out Invert Level (m)	Pipe Out Diameter (mm)	Pipes In PN	Pipes In Invert Level (m)	Pipes In Diameter (mm)	Pipes In Backdrop (mm)	Manhole Easting (m)	Manhole Northing (m)
MH3/01	10.305	1.900	Type B	1200	1.000	8.855	225					516448.942	105062.530
MH3/02	9.875	1.900	Type B	1200	1.001	8.425	225	1.000	8.425	225		516434.379	105005.508
MH3/03	9.765	1.930	Type B	1200	1.002	8.285	225	1.001	8.285	225		516432.454	104982.689
MH3/04	9.110	1.900	Type B	1200	1.003	7.660	225	1.002	7.785	225		516391.481	104980.885
MH3/05	8.700	2.024	Type B	1200	1.004	7.576	225	1.003	7.576	225		516372.991	104980.071
MH3/06	8.700	2.150	Type B	1200		7.000	225					516371.206	104980.482

SCHEDULE FOR HIGHWAY DRAINAGE NETWORK SERVING SOAKAWAY SA04

Manhole Name	Cover Level (m)	MH Depth (m)	Catchpit Type	Manhole Diam.,L*W (mm)	Pipe Out PN	Pipe Out Invert Level (m)	Pipe Out Diameter (mm)	Pipes In PN	Pipes In Invert Level (m)	Pipes In Diameter (mm)	Pipes In Backdrop (mm)	Manhole Easting (m)	Manhole Northing (m)
MH4/01	10.120	1.490	Type B	1200	1.000	9.080	225					516433.912	105079.973
MH4/02	9.550	1.438	Type B	1200	2.000	8.562	225					516373.865	105117.502
MH4/03	9.500	1.598	Type B	1200	1.001	8.352	225	1.000	8.352	225		516373.563	105085.578
								2.000	8.352	225			
MH4/04	9.430	2.040	Type B	1200	1.002	8.290	225	1.001	8.290	225		516363.056	105086.550
MH4/05	9.400	2.150	Type B	1200		7.700	225					516352.581	105087.269

SCHEDULE FOR HIGHWAY DRAINAGE NETWORK SERVING SOAKAWAY SA05

Manhole Name	Cover Level (m)	MH Depth (m)	Catchpit Type	Manhole Diam.,L*W (mm)	Pipe Out PN	Pipe Out Invert Level (m)	Pipe Out Diameter (mm)	Pipes In PN	Pipes In Invert Level (m)	Pipes In Diameter (mm)	Pipes In Backdrop (mm)	Manhole Easting (m)	Manhole Northing (m)
SA05/01	6.850	1.345	Type B	1200	1.000	5.955	225					516307.146	104715.839
MH05/02	7.065	1.688	Type B	1200	1.001	5.837	225	1.000	5.837	225		516327.078	104717.213
SA05/03	7.220	1.932	Type B	1200	1.002	5.738	225	1.001	5.738	225		516329.060	104733.961
SA05/04	7.150	2.027	Type B	1200	1.003	5.573	225	1.002	5.573	225		516336.229	104761.134
SA05/05	7.015	2.365	Type B	1200	1.004	5.500	225	1.003	5.500	225		516325.088	104766.525
SA05/06	6.900	1.868	Type B	1200	1.005	5.482	225	1.004	5.482	225		516322.183	104767.274

S104 Adoptable foul sewer manhole schedule

Manhole Name	Cover Level (m)	MH Depth (m)	Manhole Type	Manhole Diam.,L*W (mm)	Pipe Out PN	Pipe Out Invert Level (m)	Pipe Out Diameter (mm)	Pipes In PN	Pipes In Invert Level (m)	Pipes In Diameter (mm)	Manhole Easting (m)	Manhole Northing (m)
F1	9.985	2.514	Type B	1200	F1.000	7.471	225				516419.943	105083.966
F2	10.215	2.820	Type B	1200	F1.001	7.395	225	F1.000	7.395	225	516437.007	105082.343
F3	10.330	2.996	Type B	1200	F1.002	7.334	225	F1.001	7.334	225	516448.991	105075.609
F4	10.375	3.103	Type B	1200	F1.003	7.272	225	F1.002	7.272	225	516451.662	105062.066
F5	9.905	2.910	Type B	1200	F1.004	6.995	225	F1.003	6.995	225	516436.199	105001.526
F6	9.860	2.916	Type B	1200	F1.005	6.944	225	F1.004	6.944	225	516436.262	104990.142
F7	9.260	1.430	Type C	1200	F2.000	7.830	100				516393.048	104995.235
F8	9.115	1.491	Type C	1200	F2.001	7.624	100	F2.000	7.624	100	516393.480	104978.746
F9	9.915	3.015	Type B	1200	F1.006	6.900	225	F1.005	6.900	225	516439.542	104980.773
								F2.001	7.025	100		
F10	9.785	2.951	Type B	1200	F1.007	6.834	225	F1.006	6.834	225	516445.990	104967.468
F11	9.615	2.844	Type B	1200	F1.008	6.771	225	F1.007	6.771	225	516446.140	104953.347
F12	9.325	2.660	Type B	1200	F1.009	6.665	225	F1.008	6.665	225	516437.952	104930.810
F13	8.920	2.400	Type B	1200	F1.010	6.520	225	F1.009	6.520	225	516432.600	104898.590
F14	8.655	1.450	Type C	1200	F3.000	7.205	100				516382.158	104915.274
F15	8.465	1.441	Type C	1200	F3.001	7.024	100	F3.000	7.024	100	516377.251	104901.628
F16	8.265	1.454	Type C	1200	F3.002	6.812	150	F3.001	6.862	100	516376.207	104888.670
F17	8.570	2.054	Type B	1200	F3.003	6.517	225	F3.002	6.592	150	516407.872	104879.437
F18	8.610	2.204	Type B	1200	F1.011	6.407	225	F1.010	6.407	225	516426.194	104874.091
								F3.003	6.407	225		
F19	8.350	2.039	Type B	1200	F1.012	6.311	225	F1.011	6.311	225	516421.104	104853.250
F20	8.130	1.903	Type B	1200	F1.013	6.227	225	F1.012	6.227	225	516417.570	104834.732
F21	7.645	1.415	Type C	1200	F4.000	6.230	225				516395.307	104810.771
F22	7.905	1.702	Type C	1200	F4.001	6.203	225	F4.000	6.203	225	516401.243	104809.898
F23	7.905	1.778	Type B	1200	F1.014	6.127	225	F1.013	6.127	225	516414.210	104812.478
								F4.001	6.127	225		
F24	8.250	2.255	Type B	1200	F1.015	5.995	225	F1.014	5.995	225	516443.532	104807.902
F25	8.495	2.559	Type B	1200	F1.016	5.936	225	F1.015	5.936	225	516456.847	104806.974
F26	8.565	2.667	Type B	1200	F1.017	5.898	225	F1.016	5.898	225	516464.895	104804.121
F27	8.605	2.747	Type B	1200	F1.018	5.858	225	F1.017	5.858	225	516470.526	104797.178
F28	8.610	2.784	Type B	1200	F1.019	5.826	225	F1.018	5.826	225	516471.770	104789.880
F29	8.860	3.331	Type A	1200	F1.020	5.529	225	F1.019	5.529	225	516537.408	104778.012
F30	8.960	3.528	Type A	1200	F1.021	5.432	225	F1.020	5.432	225	516542.369	104799.268
F31	9.120	3.951	Type A	1200		Existing	225	F1.021	5.169	225	516593.168	104786.683

Notes
1. Do not scale from this drawing. All dimensions shown are in metres unless noted otherwise.
2. S38 Highway drainage manholes to be in accordance with WSCC standard details.
3. S104 Foul Water Sewer manholes to be in accordance with Sewerage Sector Guidance Appendix C and Standard Details.

Ordnance Survey Licence number: 100057360

Drawing Revisions

Rev:	Drn:	Date:	Details	Chk:
C01	BM	16/04/2024	CONSTRUCTION ISSUE	BM
C02	BM	0/06/2025	CONSTRUCTION ISSUE MHF30/31 amended	BM

Client
Persimmon Homes (Thames Valley) Ltd

Project
West Sompting, West Sussex

Title
Phase 1 Engineering Details External Works - Manhole Schedules

MILESTONE TRANSPORT PLANNING
7 Ancells Court, Rye Close, Fleet, Hampshire, GU51 2UY
Tel: 01483 397888
Gateshead IBC, Mulgrave Terrace, Gateshead, NE8 1AN
Tel: 0191 338 7220
web: www.milestonetp.co.uk

Drawing Number: 601-140-101

Scale: Scale @ A1

Revision: C02

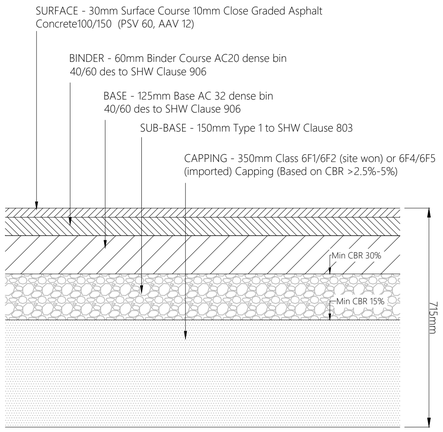

Carriageway Type 3 Construction S38 Asphalt Concrete Road
(to be read in conjunction with WSCC Std Detail S278/38/21)

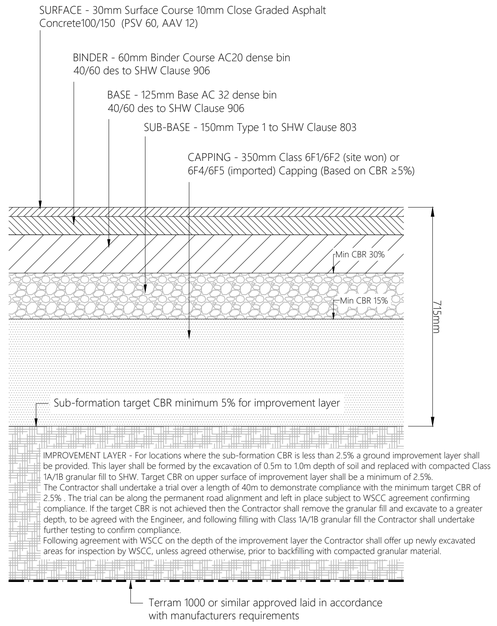

Carriageway Type 3A Construction S38 Asphalt Concrete Road (CBR<2.5%)
(to be read in conjunction with WSCC Std Detail S278/38/21)

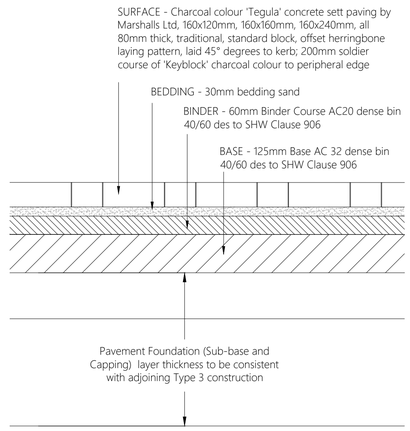

Carriageway Type 4 Concrete Sett Paving to raised tables
(to be read in conjunction with WSCC Std Detail S278/38/21)

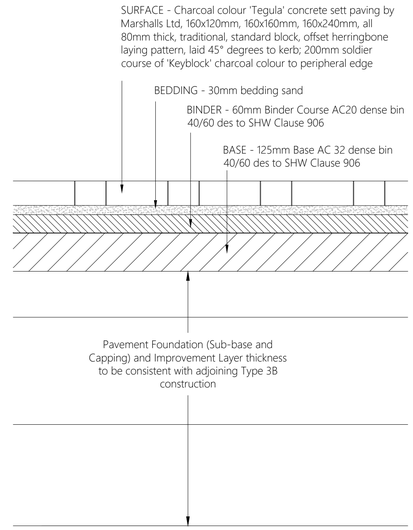

Carriageway Type 4A Concrete Sett Paving to raised tables (to be read in conjunction with WSCC Std Detail S278/38/21)

Notes

1. Do not scale from this drawing. All dimensions shown are in millimetres unless noted otherwise.
2. All kerb and edging concrete races shall be shuttered front and back to minimise excessive use of concrete.
3. Following West Sussex County Council (WSCC) Standard Construction Details to apply to adopted and non-adopted works unless stated otherwise:

West Sussex Construction Details	
Drawing No.	Drawing Title
S278/38/01	Alternative methods of Laying Kerbs
S278/38/02	Approved Kerb Type Selection Sheet 1
S278/38/03	Approved Kerb Type Selection Sheet 2
S278/38/04	Footway/Cycleway Type 1 & 2
S278/38/06	Footway/Footpath (Rural) Type 5
S278/38/07	Footway Crossover Type 1 - Residential
S278/38/10	Preferred Arrangement of Services within Public Highway
S278/38/11	Drainage Gully A - Pre-Cast Concrete
S278/38/13	Drainage Type B Catchpit
S278/38/15	Street Furniture Rumble Strips
S278/38/16	Street Furniture Ramp Feature
S278/38/18	Street Furniture Tactile Crossings
S278/38/21	Carriageway Flexible Specification
S278/38/33	Drainage Pipe Bedding Details
S278/38/34	Drainage Cellular Storage (Sheet 1 of 2)
S278/38/35	Drainage Cellular Storage (Sheet 1 of 2)
S278/38/36	Drainage Lateral Connection

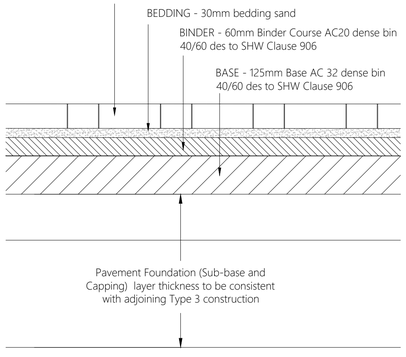

Carriageway Type 4B Concrete Sett Paving to shared surface roads
(to be read in conjunction with WSCC Std Detail S278/38/21)

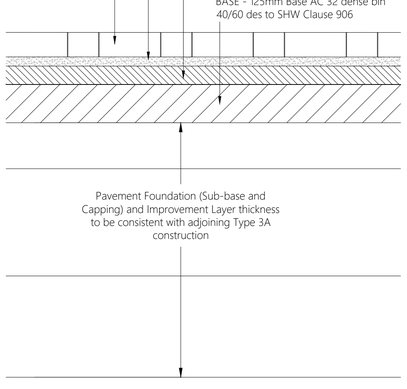

Carriageway Type 4C Concrete Sett Paving for shared surface roads
(to be read in conjunction with WSCC Std Detail S278/38/21)

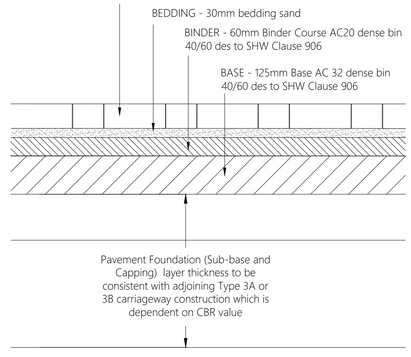

Carriageway Type 5 Concrete Sett Paving to transitions/ramps
(to be read in conjunction with WSCC Std Detail S278/38/21)

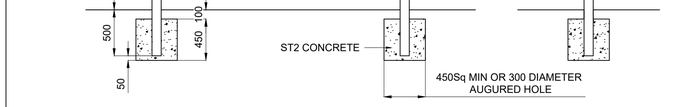

900mm TIMBER KNEE RAIL FENCE DETAIL

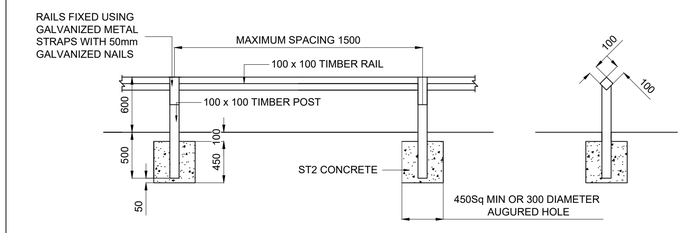

600mm TIMBER KNEE RAIL FENCE DETAIL

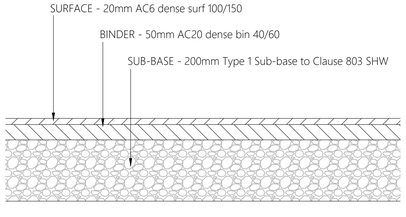

Type 8 Flexible Footway Construction S38 Road
(to be read in conjunction WSCC Type 1 Flexible Footway Construction (Adjcent Carriageway) Std Detail S278/38/04)

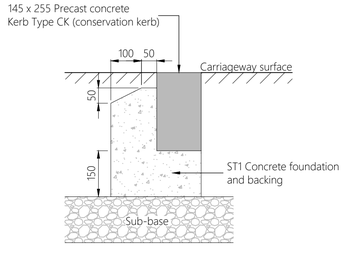

Kerb detail - Conservation Kerb
Type CK

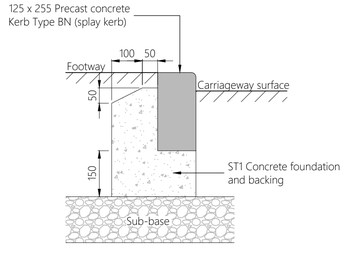

Kerb detail - Bull Nose
Kerb BN(60)

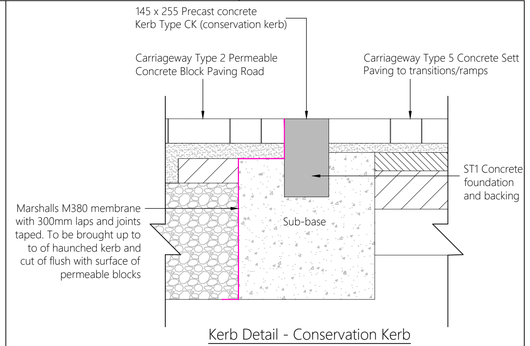

Kerb Detail - Conservation Kerb
Type CKD with Check Dam

Ordnance Survey Licence number: 100057360

Drawing Revisions

Rev:	Drn:	Date:	Details:	Chk:
C01	BM	16/04/2024	CONSTRUCTION ISSUE	BM
C02	BM	07/05/2024	Minor amendments following WSCC comments	BM

Client

Persimmon Homes
Thames Valley

Project

West Sompting, West Sussex

Title

Phase 1 Engineering Details
Adoptable External Works
Standard Details Sheet 1 of 2

MILESTONE TRANSPORT PLANNING
7 Ancells Court, Rye Close, Fleet, Hampshire, GU51 2UY
Tel: 01483 397888
Gateshead IBC, Mulgrave Terrace, Gateshead, NE8 1AN
Tel: 0191 338 7220
web: www.milestonetp.co.uk

Drawing Number: 601-180-106

Scale: As shown @ A1

Revision: C02

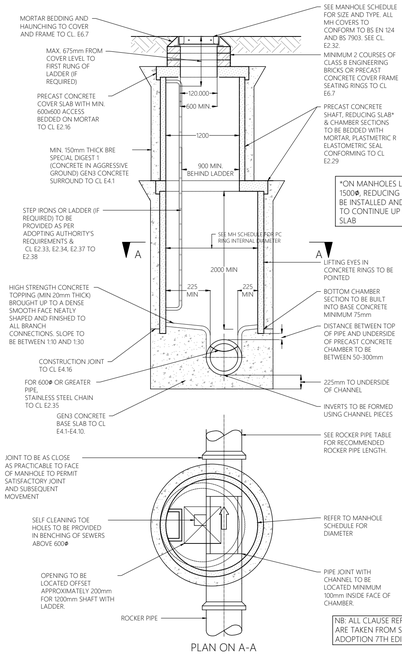

PLAN ON A-A

TYPICAL MANHOLE DETAIL TYPE A1
(SFA7 TYPE 1)

NB: ALL CLAUSE REFERENCES ARE TAKEN FROM SEWERS FOR ADOPTION 7TH EDITION

DEPTH FROM COVER LEVEL TO SOFFIT OF PIPE NOT EXCEEDING 1m
RIGID MATERIAL, NON MAN ENTRY

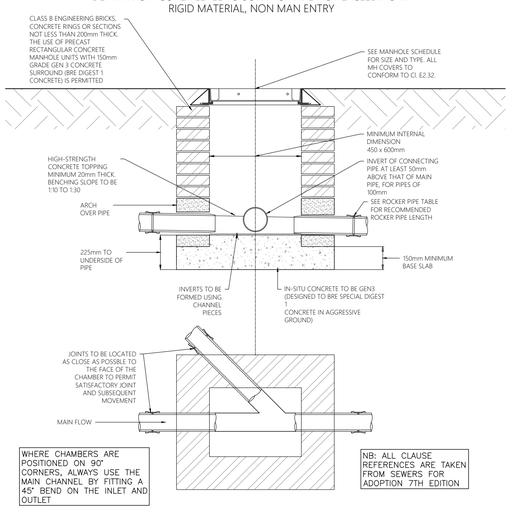

WHERE CHAMBERS ARE POSITIONED ON 90° CORNERS, ALWAYS USE THE MAIN CHANNEL BY FITTING A 45° BEND ON THE INLET AND OUTLET

NB: ALL CLAUSE REFERENCES ARE TAKEN FROM SEWERS FOR ADOPTION 7TH EDITION

TYPICAL INSPECTION CHAMBER TYPE D
(SFA7 TYPE 4 (BRICK))

MAXIMUM DEPTH FROM COVER LEVEL TO INVERT OF PIPE NOT EXCEEDING 3m
IN AREAS SUBJECT TO VEHICLE LOADING, NON MAN ENTRY

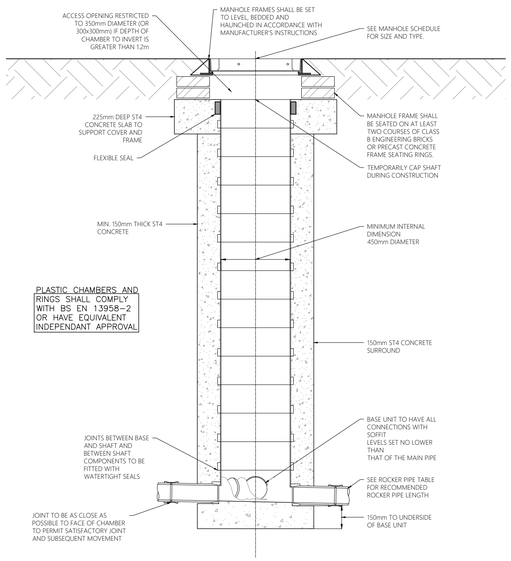

NON-ADOPTABLE 450mm INSPECTION CHAMBER

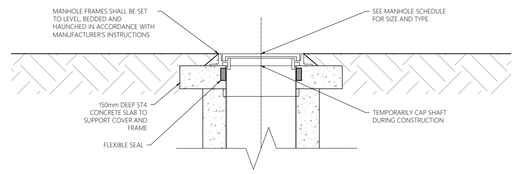

ALTERNATIVE ACCESS/INSPECTION CHAMBER COVER - DOMESTIC DRIVEWAYS OR FOOTWAYS

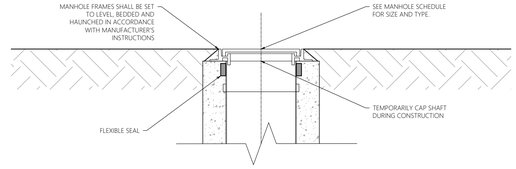

ALTERNATIVE ACCESS/INSPECTION CHAMBER COVER - DOMESTIC GARDENS OR LANDSCAPED AREAS

NON-ADOPTABLE AC & IC ALTERNATIVE COVERS

Notes

1. Do not scale from this drawing. All dimensions shown are in millimetres unless noted otherwise.
2. To be read in conjunction with Drainage Standard Details Sheet 2 drawing no. 601-180-109.
3. Following West Sussex County Council (WSCC) Standard Construction Details to apply to adopted and non-adopted works unless stated otherwise:

West Sussex Construction Details	
Drawing No.	Drawing Title
S278/38/01	Alternative methods of Laying Kerbs
S278/38/02	Approved Kerb Type Selection Sheet 1
S278/38/03	Approved Kerb Type Selection Sheet 2
S278/38/04	Footway/Cycleway Type 1 & 2
S278/38/06	Footway/Footpath (Rural) Type 5
S278/38/07	Footway Crossover Type 1 - Residential
S278/38/10	Preferred Arrangement of Services within Public Highway
S278/38/11	Drainage Gully A - Pre-Cast Concrete
S278/38/13	Drainage Type B Catchpit
S278/38/15	Street Furniture Rumble Strips
S278/38/16	Street Furniture Ramp Feature
S278/38/18	Street Furniture Tactile Crossings
S278/38/21	Carriageway Flexible Specification
S278/38/33	Drainage Pipe Bedding Details
S278/38/34	Drainage Cellular Storage (Sheet 1 of 2)
S278/38/35	Drainage Cellular Storage (Sheet 1 of 2)
S278/38/36	Drainage Lateral Connection

PLAN ON A-A

TYPICAL MANHOLE DETAIL TYPE B
(SFA7 TYPE 2)

NB: ALL CLAUSE REFERENCES ARE TAKEN FROM SEWERS FOR ADOPTION 7TH EDITION

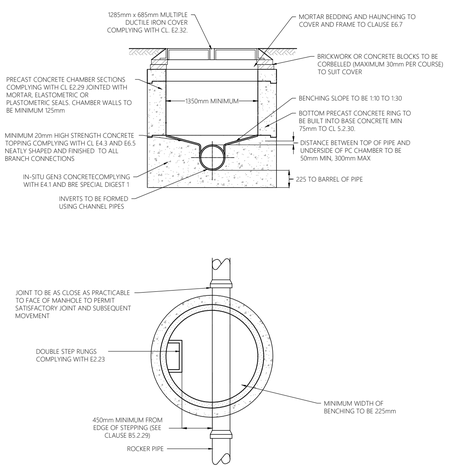

PLAN ON A-A

TYPICAL MANHOLE DETAIL TYPE C

Cover Detail for Trafficked areas with Extension Option

Typical Detail for Silt Trap Non Trafficked areas

SVP CONNECTION

RODDING EYE (PLASTIC)

Ordnance Survey Licence number: 100057360

Drawing Revisions

Rev:	Drn:	Date:	Details:	Chk:
C01	BM	16/04/2024	CONSTRUCTION ISSUE	BM

Client

Persimmon Homes
Thames Valley

Project

West Sompting, West Sussex

Title

Phase 1
Drainage Standard Details
Sheet 1

MILESTONE TRANSPORT PLANNING
7 Ancells Court, Rye Close, Fleet, Hampshire, GU51 2UY
Tel: 01483 397888
Gateshead IBC, Mulgrave Terrace, Gateshead, NE8 1AN
Tel: 0191 338 7220
web: www.milestonetp.co.uk

Drawing Number: 601-180-107

Scale: As shown @ A1

Revision: C01

S38 CARRIAGEWAY WITH FOOTWAY AND VEHICLE CROSSOVER CONSTRUCTION DETAIL

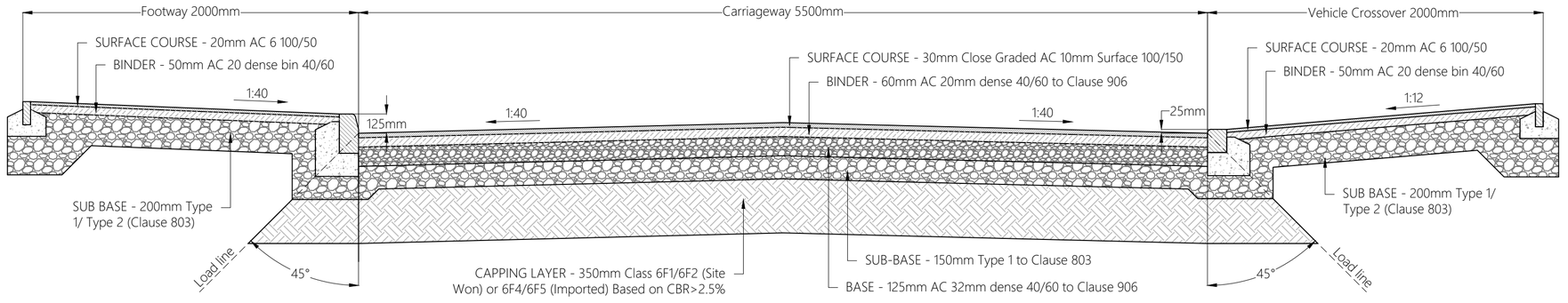

S38 SHARED SURFACE TABLE WITH FOOTWAY AND VEHICLE CROSSOVER CONSTRUCTION DETAIL

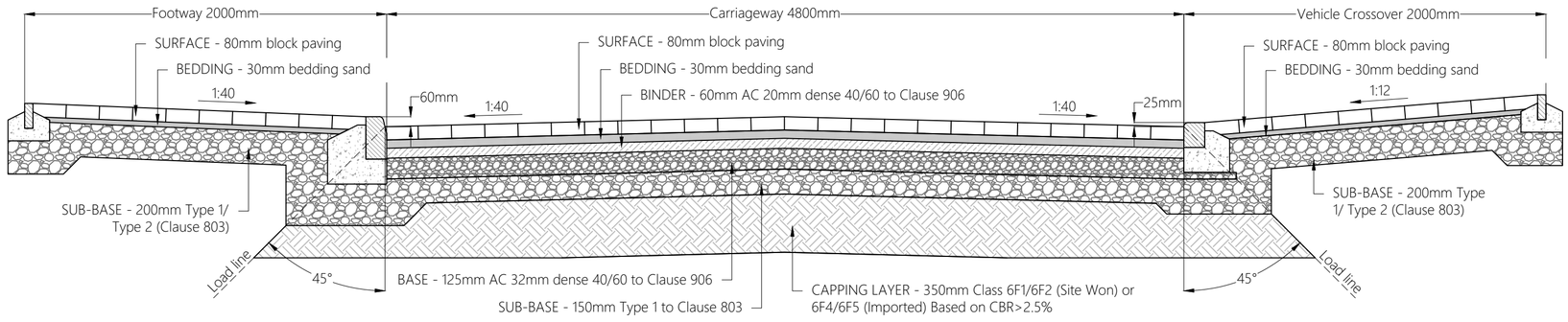

S38 SHARED SURFACE CONSTRUCTION DETAIL

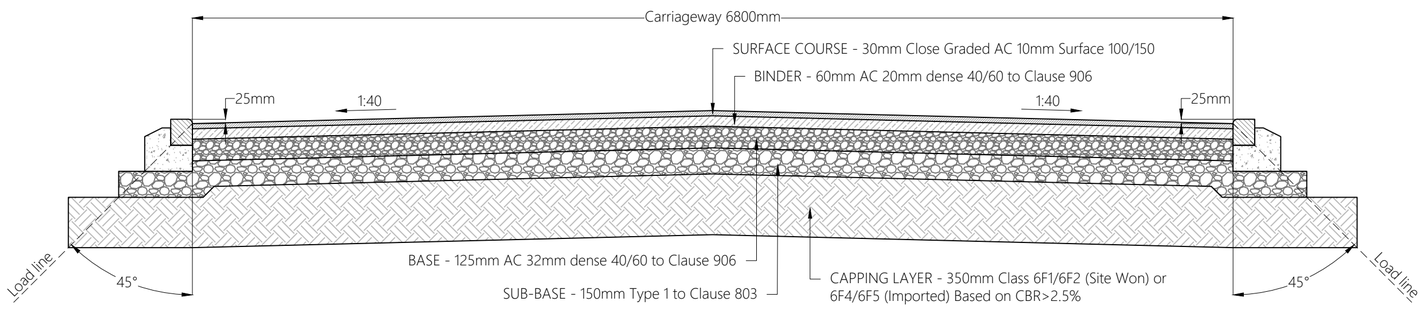

S38 CARRIAGEWAY WITH FOOTWAY AND VEHICLE CROSSOVER CONSTRUCTION DETAIL WITH IMPROVEMENT LAYER

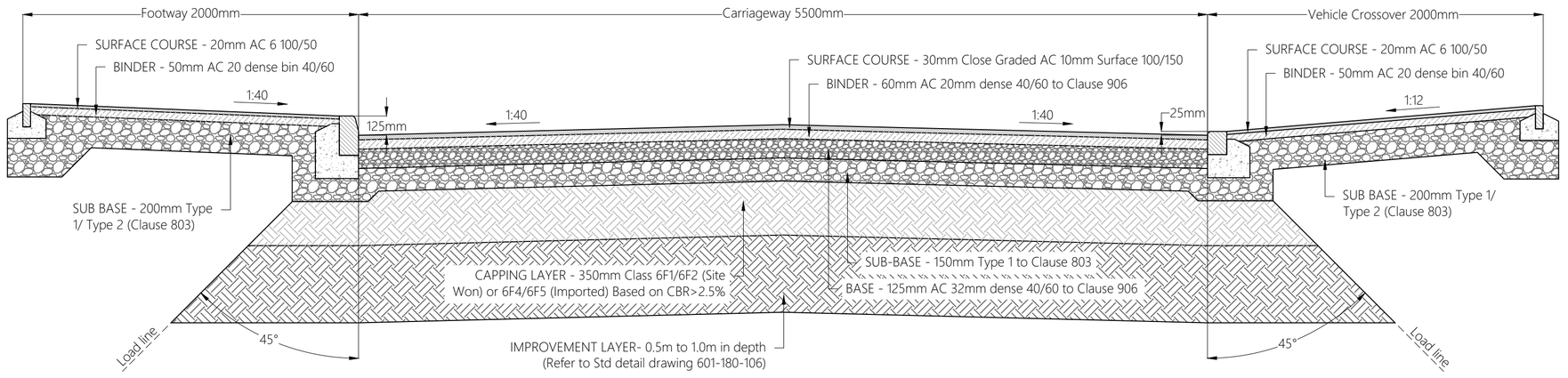

S38 SHARED SURFACE TABLE WITH FOOTWAY AND VEHICLE CROSSOVER CONSTRUCTION DETAIL WITH IMPROVEMENT LAYER

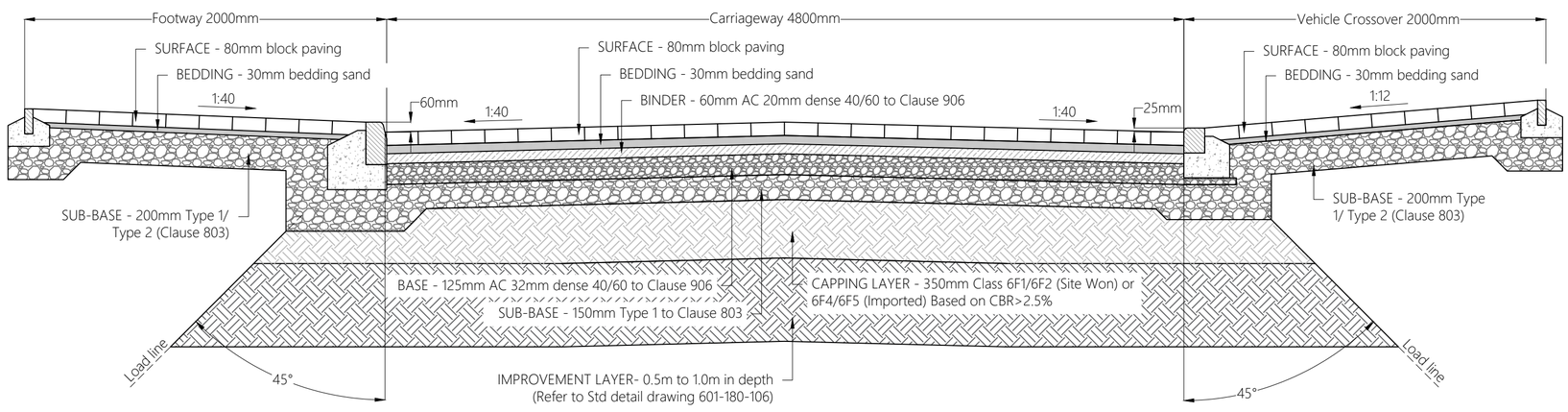

S38 SHARED SURFACE CONSTRUCTION DETAIL WITH IMPROVEMENT LAYER

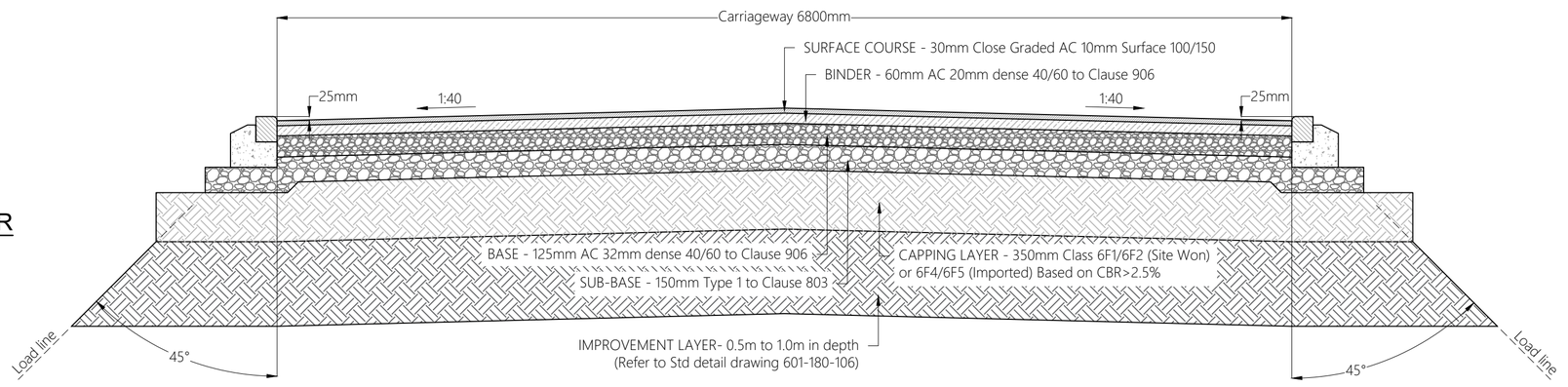

PERMEABLE SHARED SURFACE FOR NON ADOPTED AREAS CONSTRUCTION DETAIL

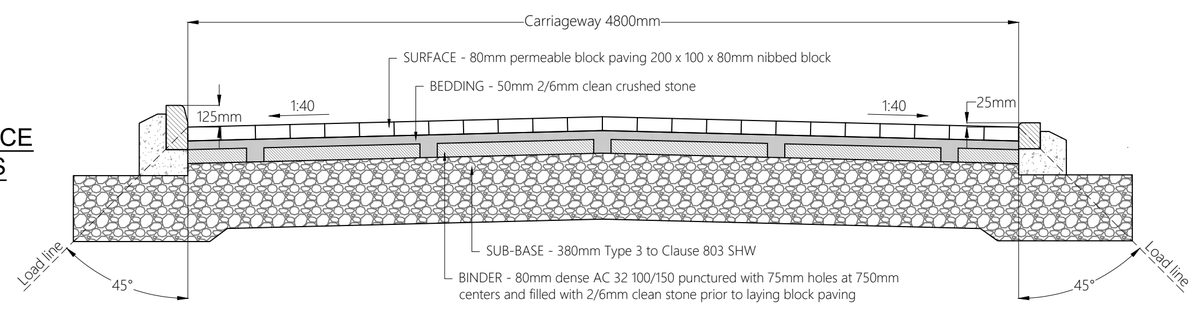

Notes

1. Do not scale from this drawing. All dimensions shown are in millimetres unless noted otherwise.
2. All kerb and edging concrete races shall be shuttered front and back to minimise excessive use of concrete.
3. Following West Sussex County Council (WSCC) Standard Construction Details to apply to adopted and non-adopted works unless stated otherwise:

Ordnance Survey Licence number: 100057360

Notes

West Sussex Construction Details

Drawing No.	Drawing Title
S278/38/01	Alternative methods of Laying Kerbs
S278/38/02	Approved Kerb Type Selection Sheet 1
S278/38/03	Approved Kerb Type Selection Sheet 2
S278/38/04	Footway/Cycleway Type 1 & 2
S278/38/06	Footway/Footpath (Rural) Type 5
S278/38/07	Footway Crossover Type 1 - Residential
S278/38/10	Preferred Arrangement of Services within Public Highway
S278/38/11	Drainage Gully A - Pre-Cast Concrete
S278/38/13	Drainage Type B Catchpit
S278/38/15	Street Furniture Rumble Strips
S278/38/16	Street Furniture Ramp Feature
S278/38/18	Street Furniture Tactile Crossings
S278/38/21	Carriageway Flexible Specification
S278/38/33	Drainage Pipe Bedding Details
S278/38/34	Drainage Cellular Storage (Sheet 1 of 2)
S278/38/35	Drainage Cellular Storage (Sheet 1 of 2)
S278/38/36	Drainage Lateral Connection

Drawing Revisions

Rev:	Drn:	Date:	Details	Chk:
C01	BM	16/04/2024	CONSTRUCTION ISSUE	BM

Client

Persimmon Homes
Thames Valley

Project

West Sompting, West Sussex

Title

Phase 1 Engineering Details
External Works - Typical Carriageway Sections

MILESTONE TRANSPORT PLANNING
7 Ancells Court, Rye Close, Fleet, Hampshire, GU51 2UY
Tel: 01483 397888
Gateshead IBC, Mulgrave Terrace, Gateshead, NE8 1AN
Tel: 0191 338 7220
web: www.milestonetp.co.uk

Drawing Number:

601-180-108

Scale:

N.T.S @ A1

Revision:

C01

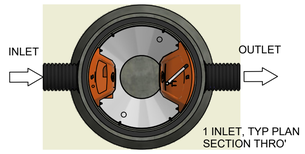

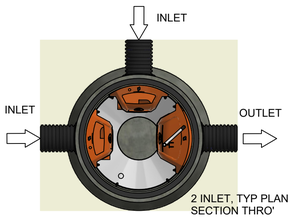

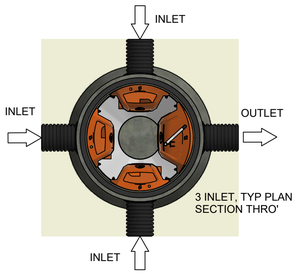

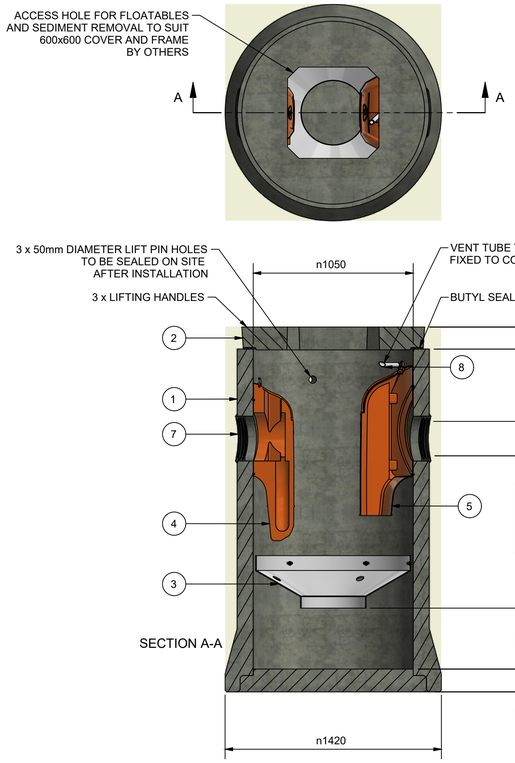

PARTS LIST		
ITEM	DESCRIPTION	MASS
1	Concrete Chamber	2750.0 kg
2	Cover Slab	270.0 kg
3	Benching Skirt	6.6 kg
4	Inlet Chute	5.4 kg
5	Outlet Hood	7.2 kg
6	DN150/225/300 Pipe Connection	
7	Forsheda Connector Seal	
8	PVC Flexible Hose Assembly	.1 kg

Note:
1. Angles can be adjusted to suit.

Minimum angle between inlets and outlet is 90~.

2. Maximum number of inlets is 3.
3. Allowable concrete chamber dimensional variations:

Height `4%

Diameter `8mm

Wall Thickness `8mm

REVISION HISTORY			
REV	BY CHK APP	DESCRIPTION	DATE
-	JM CG RWB	FIRST RELEASE	25/02/2022

PROJECTION

IF IN DOUBT ASK

DATE: 25/02/2022	SCALE: 1:30
DRAWN BY: JM	CHECKED BY: CG
APPROVED BY: RWB	

Title
XXXXProject

Downstream Defender Select 1000 Concrete, Advanced Vortex

Hydro International
hydro-int.com

©2022 HYDRO INTERNATIONAL

WEIGHT: N/A	MATERIAL:
STOCK NUMBER:	
DRAWING NO.: XXXXPROJECT-1000CAV	
SHEET SIZE: A3	SHEET: 1 OF 1
Rev: -	

ADVANCED VORTEX DOWNSTREAM DEFENDER

NOTES :
1. Soakaways should be sited at least 5m away from the building. (Ref BS EN 752)
2. Loading capacity 17.5 tonnes/m² vertically 4.0 tonnes/m² laterally

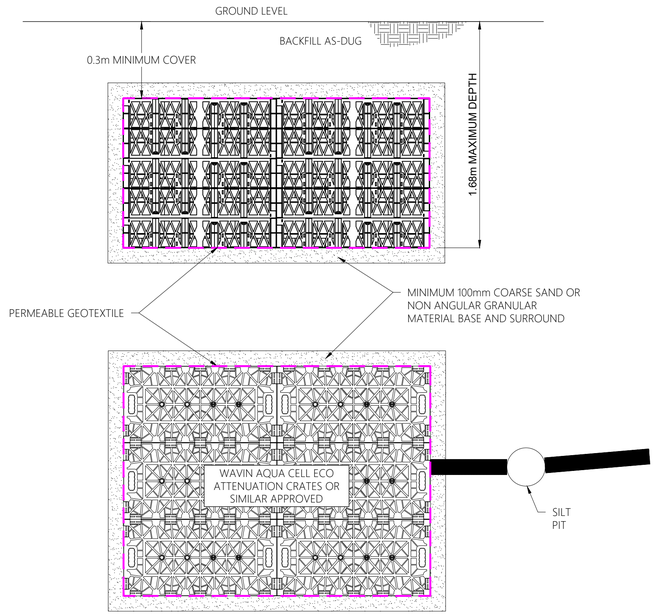

TYPICAL HOUSE SOAKAWAY DETAIL

Notes
1. Do not scale from this drawing. All dimensions shown are in millimetres unless noted otherwise.
2. To be read in conjunction with Drainage Standard Details Sheet 1 drawing no. 601-180-107.
3. Following West Sussex County Council (WSCC) Standard Construction Details to apply to adopted and non-adopted works unless stated otherwise:

West Sussex Construction Details	
Drawing No.	Drawing Title
S278/38/01	Alternative methods of Laying Kerbs
S278/38/02	Approved Kerb Type Selection Sheet 1
S278/38/03	Approved Kerb Type Selection Sheet 2
S278/38/04	Footway/Cycleway Type 1 & 2
S278/38/06	Footway/Footpath (Rural) Type 5
S278/38/07	Footway Crossover Type 1 - Residential
S278/38/10	Preferred Arrangement of Services within Public Highway
S278/38/11	Drainage Gully A - Pre-Cast Concrete
S278/38/13	Drainage Type B Catchpit
S278/38/15	Street Furniture Rumble Strips
S278/38/16	Street Furniture Ramp Feature
S278/38/18	Street Furniture Tactile Crossings
S278/38/21	Carriageway Flexible Specification
S278/38/33	Drainage Pipe Bedding Details
S278/38/34	Drainage Cellular Storage (Sheet 1 of 2)
S278/38/35	Drainage Cellular Storage (Sheet 1 of 2)
S278/38/36	Drainage Lateral Connection

Ordnance Survey Licence number: 100057360

Drawing Revisions

Rev:	Drn:	Date:	Details:	Chk:
C01	BM	16/04/2024	CONSTRUCTION ISSUE	BM

Client
Persimmon Homes
Thames Valley

Project
West Sompting, West Sussex

Title
Phase 1
Drainage Standard Details
Sheet 2

MILESTONE TRANSPORT PLANNING
7 Ancells Court, Rye Close, Fleet, Hampshire, GU51 2UY
Tel: 01483 397888
Gateshead IBC, Mulgrave Terrace, Gateshead, NE8 1AN
Tel: 0191 338 7220
web: www.milestonetp.co.uk

Drawing Number: 601-180-109

Scale: NTS @ A1

Revision: C01

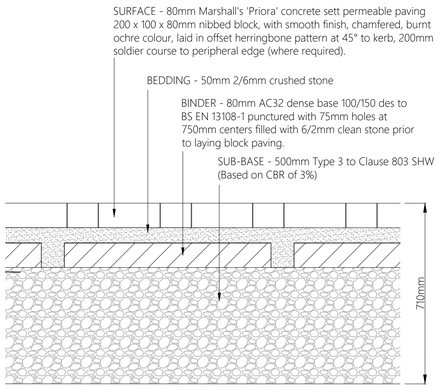

Carriageway Type 2 Permeable Concrete Block Paving Road
(For locations where CBR is less than 2% geogrid to be provided at underside of Type 3 sub-base)

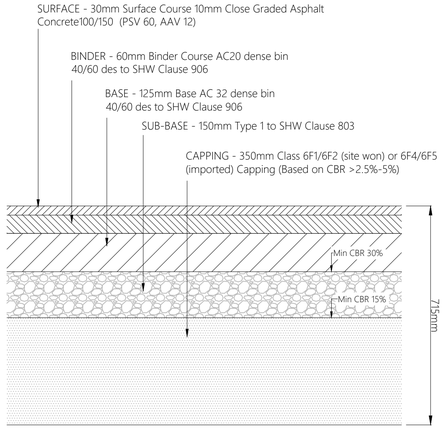

Carriageway Type 3 Construction S38 Asphalt Concrete Road
(to be read in conjunction with WSCC Std Detail S278/38/21)

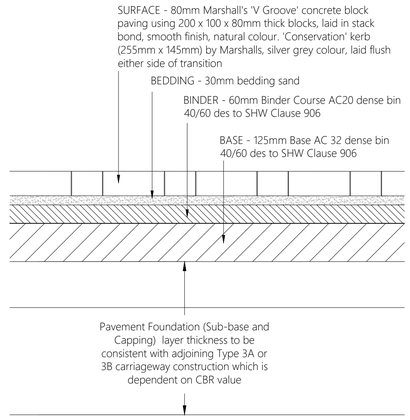

Carriageway Type 5 Concrete Sett Paving to transitions/ramps
(to be read in conjunction with WSCC Std Detail S278/38/21)

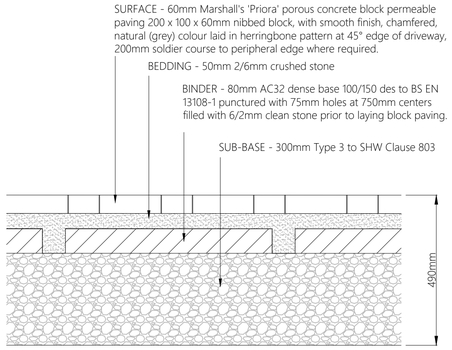

Type 7 Permeable Concrete Block Paving to driveways

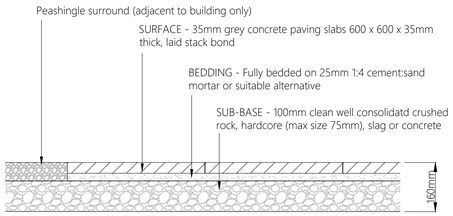

Type 6A Concrete Paving Slabs to garden paths

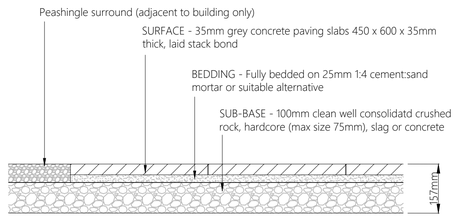

Type 12 Concrete Paving Slabs to Patios

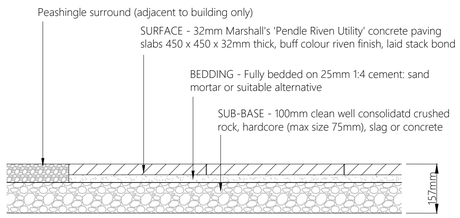

Type 9A Concrete Paving Slabs to footpaths and dwelling entrances

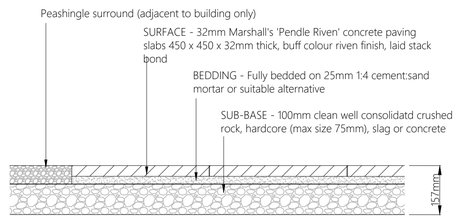

Type 9B Concrete Paving Slabs to bin stores

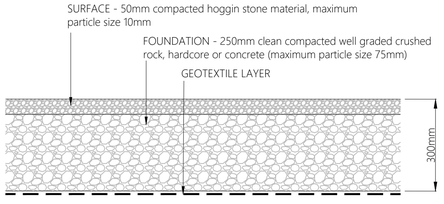

Type 1 Farm access track construction

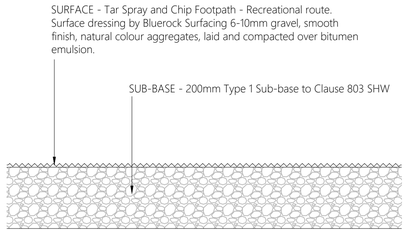

Type 10 Tar Spray and Chip Footway

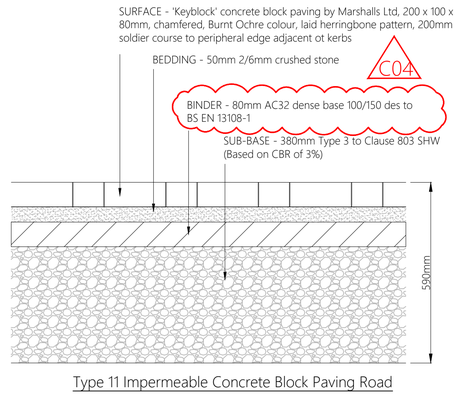

Type 11 Impermeable Concrete Block Paving Road

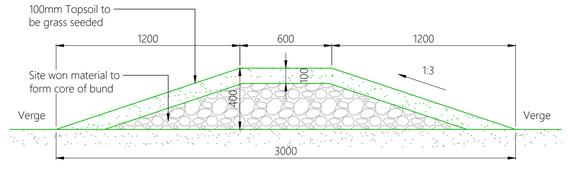

Grass Seeded Earth Bund

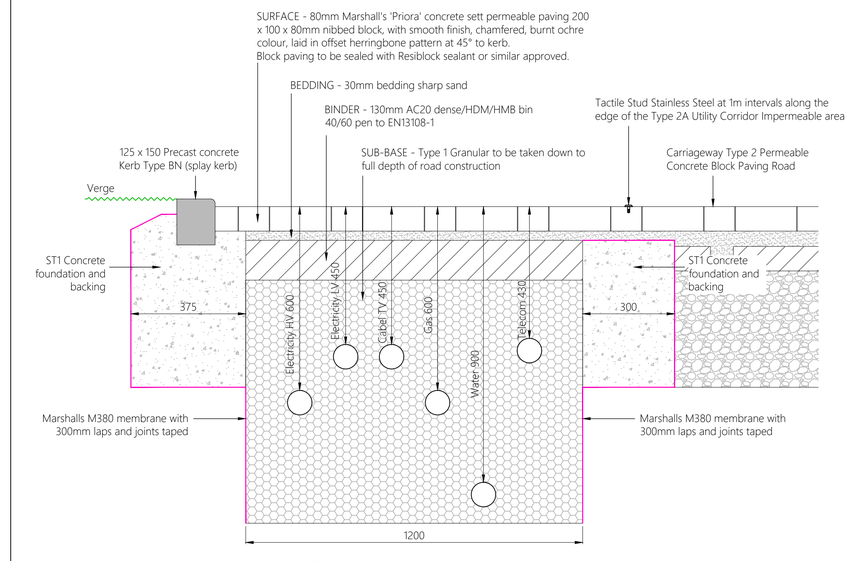

Type 2A Utility Corridor Cross Section

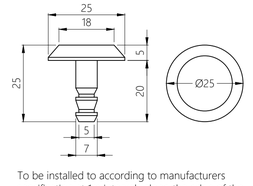

To be installed to according to manufacturers specification at 1m intervals along the edge of the Type 2A Utility Corridor Impermeable Area.

Tactile Stud Stainless Steel

Notes
1. Do not scale from this drawing. All dimensions shown are in millimetres unless noted otherwise.
2. All kerb and edging concrete races shall be shuttered front and back to minimise excessive use of concrete.
3. Following West Sussex County Council (WSCC) Standard Construction Details to apply to adopted and non-adopted works unless stated otherwise:

West Sussex Construction Details	
Drawing No.	Drawing Title
S278/38/01	Alternative methods of Laying Kerbs
S278/38/02	Approved Kerb Type Selection Sheet 1
S278/38/03	Approved Kerb Type Selection Sheet 2
S278/38/04	Footway/Cycleway Type 1 & 2
S278/38/06	Footway/Footpath (Rural) Type 5
S278/38/07	Footway Crossover Type 1 - Residential
S278/38/10	Preferred Arrangement of Services within Public Highway
S278/38/11	Drainage Gully A - Pre-Cast Concrete
S278/38/13	Drainage Type B Catchpit
S278/38/15	Street Furniture Rumble Strips
S278/38/16	Street Furniture Ramp Feature
S278/38/18	Street Furniture Tactile Crossings
S278/38/21	Carriageway Flexible Specification
S278/38/33	Drainage Pipe Bedding Details
S278/38/34	Drainage Cellular Storage (Sheet 1 of 2)
S278/38/35	Drainage Cellular Storage (Sheet 1 of 2)
S278/38/36	Drainage Lateral Connection

CBR TABLE (NHBC)		
CBR (%)	Sub-base without geogrid/geotextile (mm)	Sub-base with geogrid/geotextile (mm)
<2	N/A	300
2-3	325	225
3-5	250	150
5-7	150	N/A
7-20	100	N/A

1. CBR Table applies only to non-adoptable roads.
2. For roads with Type 3 sub-base thickness on standard details shall be minimum and not reduced based on above table to ensure attenuation volume is provided.
3. For adopted roads refer to WSCC Standard Detail drg. no. S278/S38/21.
4. Non-adopted carriageway sub-base thicknesses stated on this drawing assume 3% CBR unless stated otherwise.

Ordnance Survey Licence number: 100057360

Drawing Revisions

Rev:	Drn:	Date:	Details:	Chk:
C01	BM	16/04/2024	CONSTRUCTION ISSUE	BM
C02	BM	20/05/2024	CONSTRUCTION ISSUE	BM
C03	AM	13/09/2024	CONSTRUCTION ISSUE	BM
C04	BM	15/01/2025	TYPE 11 PAVEMENT AMENDED	BM

Client
Persimmon Homes
Thames Valley

Project
West Sompting, West Sussex

Title
Phase 1 Engineering Details
Unadopted External Works
Standard Details Sheet 2 of 2

MILESTONE TRANSPORT PLANNING
7 Ancells Court, Rye Close, Fleet, Hampshire, GU51 2UY
Tel: 01483 397888
Gateshead IBC, Mulgrave Terrace, Gateshead, NE8 1AN
Tel: 0191 338 7220
web: www.milestonetp.co.uk

Drawing Number:
601-180-110

Scale:
As shown @ A1

Revision:
C04

APPENDIX B

AS-BUILT SECTION 38 SEWER SURVEY DRAWINGS

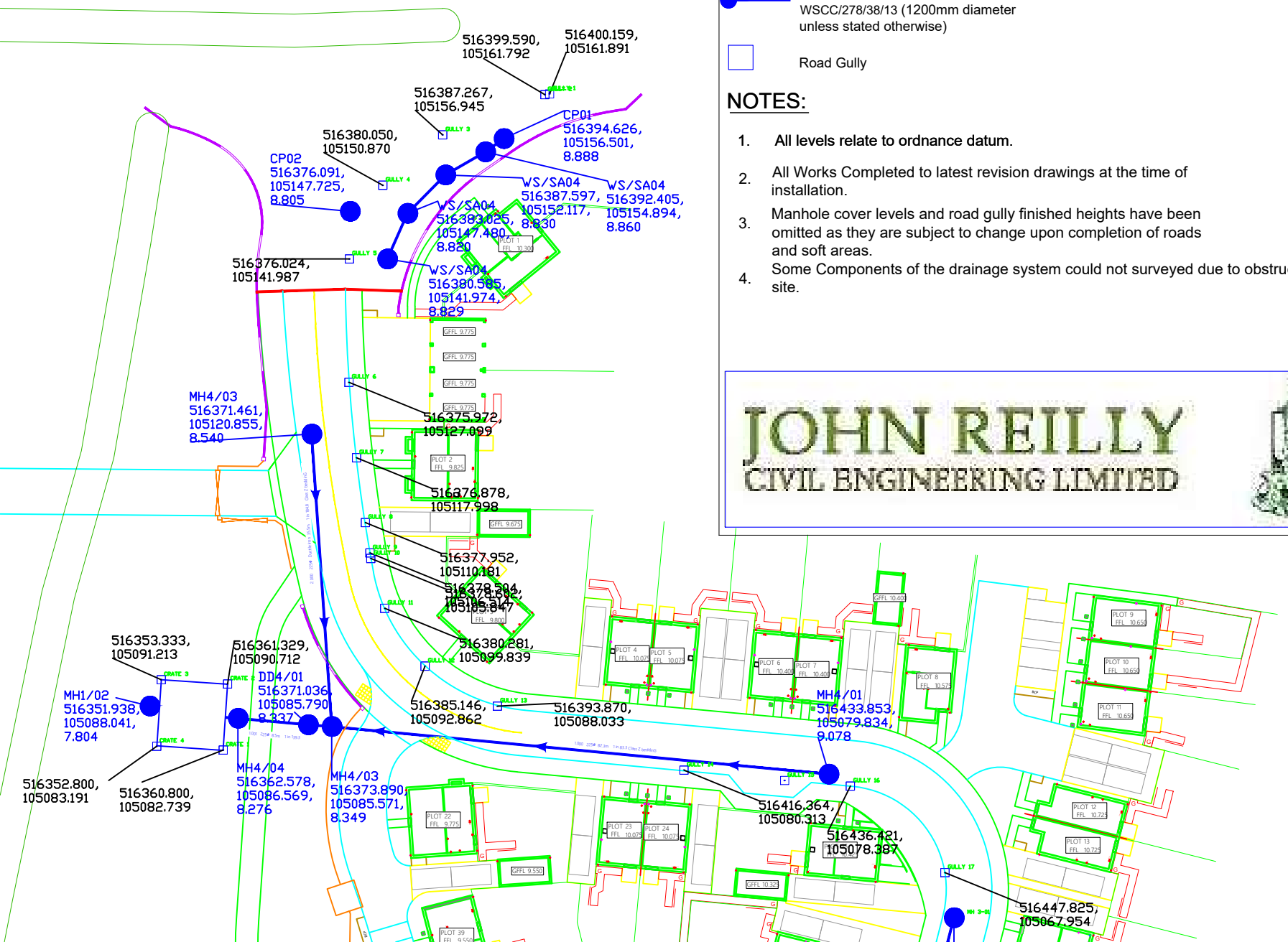

KEY:

S38 Adoptable Highway Catchpit Manhole to WSCC Std Detail WSCC/278/38/13 (1200mm diameter unless stated otherwise)

Road Gully

NOTES:

1. All levels relate to ordnance datum.
2. All Works Completed to latest revision drawings at the time of installation.
3. Manhole cover levels and road gully finished heights have been omitted as they are subject to change upon completion of roads and soft areas.
4. Some Components of the drainage system could not surveyed due to obstructions on site.

JOHN REILLY
CIVIL ENGINEERING LIMITED

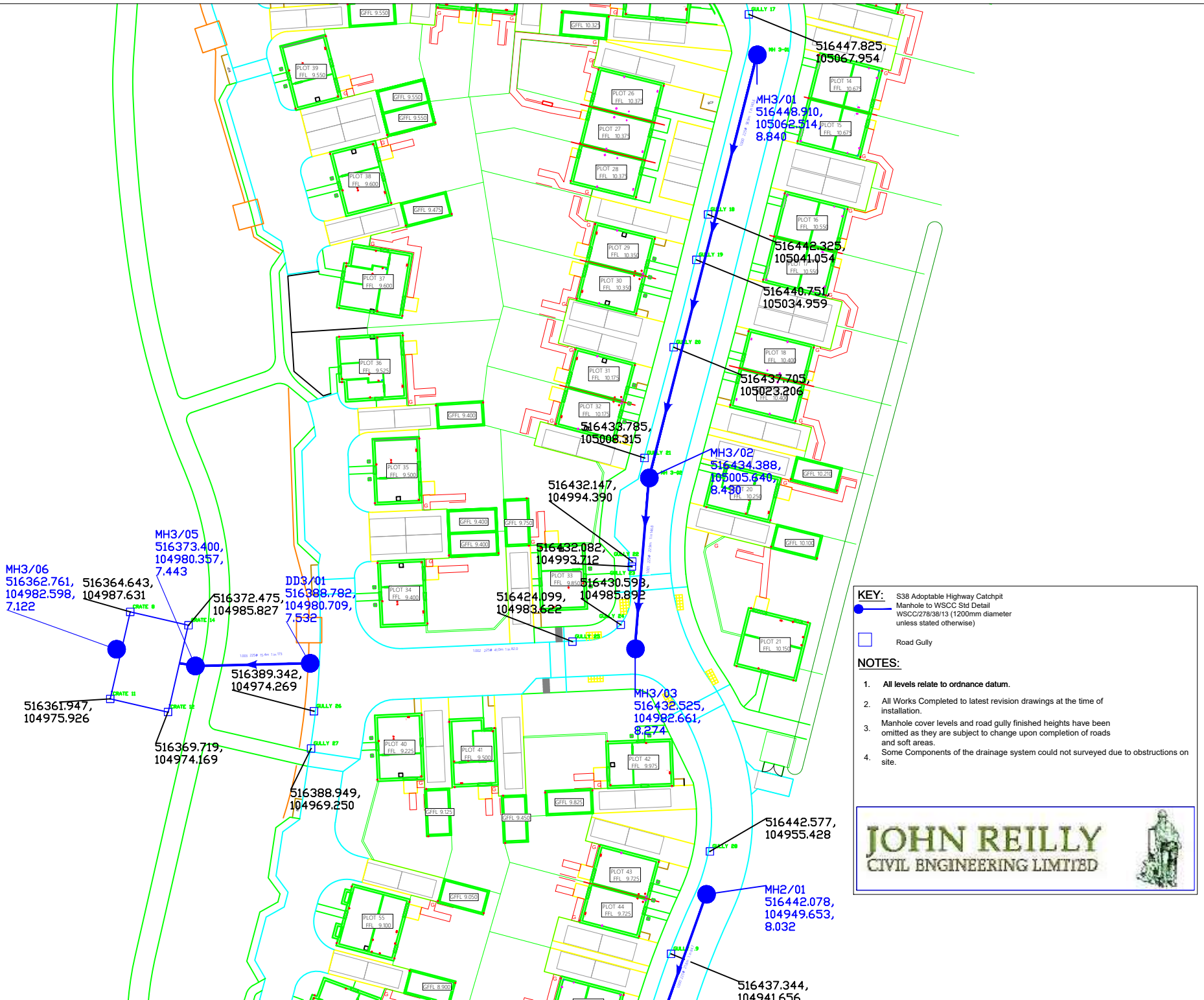
MH3/06
516362.761,
104982.598,
7.122
516364.643,
104987.631
MH3/05
516373.400,
104980.357,
7.443
516372.475,
104985.827
DD3/01
516388.782,
104980.709,
7.532
516389.342,
104974.269
516361.947,
104975.926
516369.719,
104974.169
516388.949,
104969.250
516447.825,
105067.954
MH3/01
516448.910,
105062.514,
8.840
516442.325,
105041.054
516440.751,
105034.959
516437.705,
105023.206
516433.785,
105008.315
MH3/02
516434.388,
105005.640,
8.430
516432.147,
104994.390
516432.082,
104993.712
516430.593,
104985.892
516424.099,
104983.622
MH3/03
516432.525,
104982.661,
8.274
516442.577,
104955.428
MH2/01
516442.078,
104949.653,
8.032
516437.344,
104941.656
KEY:
S38 Adoptable Highway Catchpit Manhole to WSCC Std Detail WSCC/278/38/13 (1200mm diameter unless stated otherwise)
Road Gully
NOTES:
1. All levels relate to ordnance datum.
2. All Works Completed to latest revision drawings at the time of installation.
3. Manhole cover levels and road gully finished heights have been omitted as they are subject to change upon completion of roads and soft areas.
4. Some Components of the drainage system could not surveyed due to obstructions on site.
JOHN REILLY
CIVIL ENGINEERING LIMITED

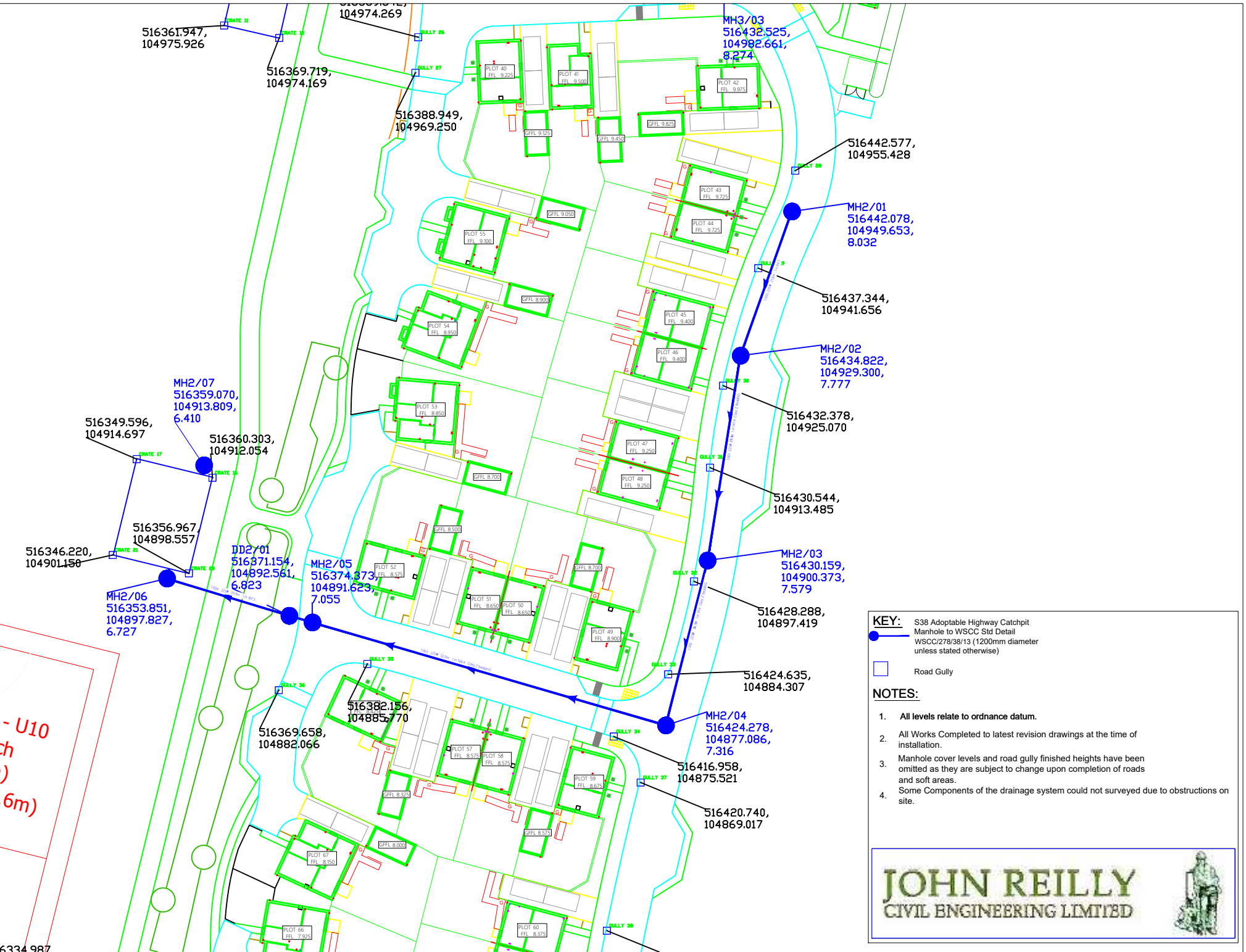
516361.947,
104975.926
516369.719,
104974.169
104974.269
516388.949,
104969.250
MH3/03
516432.525,
104982.661,
8.274
516442.577,
104955.428
MH2/01
516442.078,
104949.653,
8.032
516437.344,
104941.656
MH2/02
516434.822,
104929.300,
7.777
516432.378,
104925.070
516430.544,
104913.485
MH2/03
516430.159,
104900.373,
7.579
516428.288,
104897.419
516424.635,
104884.307
MH2/04
516424.278,
104877.086,
7.316
516416.958,
104875.521
516420.740,
104869.017
MH2/07
516359.070,
104913.809,
6.410
516349.596,
104914.697
516360.303,
104912.054
516356.967,
104898.557
516346.220,
104901.150
DD2/01
516371.154,
104892.561,
6.823
MH2/05
516374.373,
104891.623,
7.055
MH2/06
516353.851,
104897.827,
6.727
516382.156,
104885.770
516369.658,
104882.066
PLOT 40 FFL 9.225
PLOT 41 FFL 9.500
PLOT 42 FFL 9.975
PLOT 43 FFL 9.725
PLOT 44 FFL 9.725
PLOT 45 FFL 9.400
PLOT 46 FFL 9.400
PLOT 47 FFL 9.250
PLOT 48 FFL 9.250
PLOT 49 FFL 8.900
PLOT 50 FFL 8.650
PLOT 51 FFL 8.650
PLOT 52 FFL 8.575
PLOT 53 FFL 8.850
PLOT 54 FFL 8.950
PLOT 55 FFL 9.300
PLOT 57 FFL 8.575
PLOT 58 FFL 8.575
PLOT 59 FFL 8.675
PLOT 60 FFL 8.375
PLOT 66 FFL 7.925
PLOT 67 FFL 8.150
GFFL 9.125
GFFL 9.450
GFFL 9.825
GFFL 9.050
GFFL 8.900
GFFL 8.700
GFFL 8.500
GFFL 8.700
GFFL 8.325
GFFL 8.575
GFFL 8.000
GULLY 26
GULLY 27
GULLY 28
GULLY 29
GULLY 30
GULLY 31
GULLY 32
GULLY 33
GULLY 34
GULLY 35
GULLY 36
GULLY 37
GULLY 38
CRATE 11
CRATE 12
CRATE 17
CRATE 18
CRATE 21
CRATE 22
KEY:
S38 Adoptable Highway Catchpit Manhole to WSCC Std Detail WSCC/278/38/13 (1200mm diameter unless stated otherwise)
Road Gully
NOTES:
1. All levels relate to ordnance datum.
2. All Works Completed to latest revision drawings at the time of installation.
3. Manhole cover levels and road gully finished heights have been omitted as they are subject to change upon completion of roads and soft areas.
4. Some Components of the drainage system could not surveyed due to obstructions on site.
JOHN REILLY
CIVIL ENGINEERING LIMITED

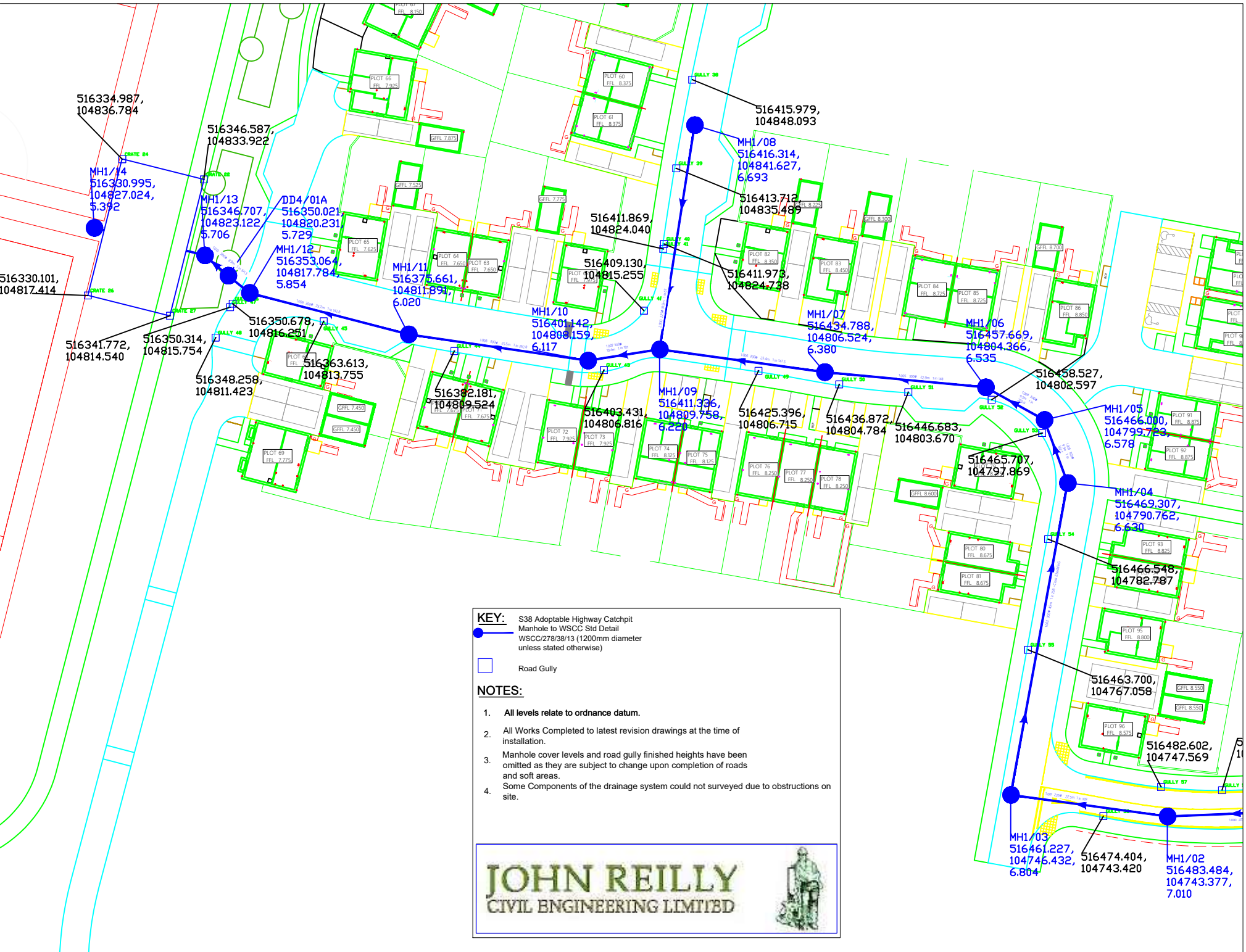

KEY:

S38 Adoptable Highway Catchpit Manhole to WSCC Std Detail WSCC/278/38/13 (1200mm diameter unless stated otherwise)

Road Gully

NOTES:

1. **All levels relate to ordnance datum.**
2. All Works Completed to latest revision drawings at the time of installation.
3. Manhole cover levels and road gully finished heights have been omitted as they are subject to change upon completion of roads and soft areas.
4. Some Components of the drainage system could not surveyed due to obstructions on site.

JOHN REILLY
CIVIL ENGINEERING LIMITED

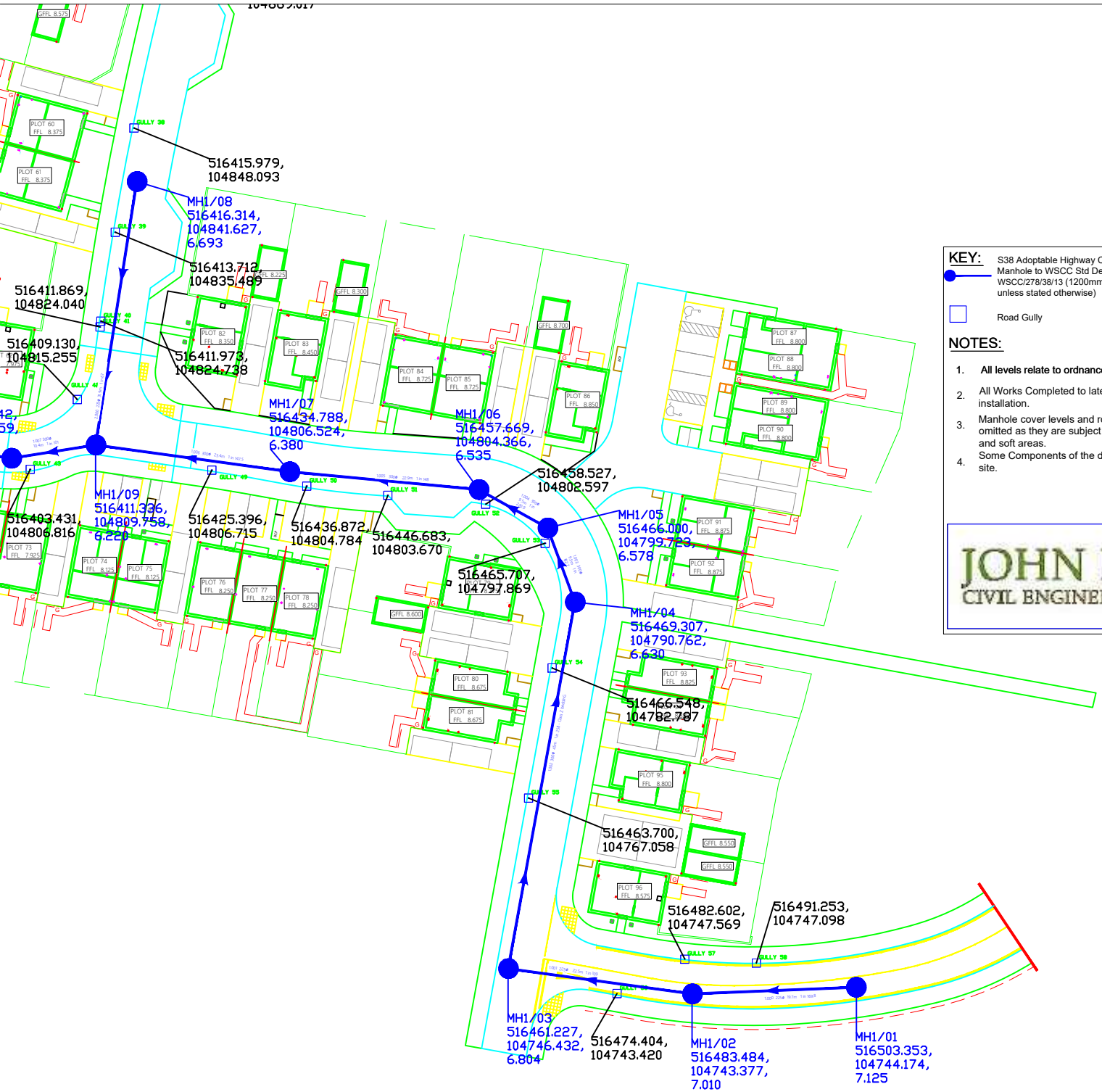

KEY:

S38 Adoptable Highway Catchpit Manhole to WSCC Std Detail WSCC/278/38/13 (1200mm diameter unless stated otherwise)

Road Gully

NOTES:

1. **All levels relate to ordnance datum.**
2. All Works Completed to latest revision drawings at the time of installation.
3. Manhole cover levels and road gully finished heights have been omitted as they are subject to change upon completion of roads and soft areas.
4. Some Components of the drainage system could not surveyed due to obstructions on site.

JOHN REILLY
CIVIL ENGINEERING LIMITED

APPENDIX C

PHASE 1 DRAINAGE MAINTENANCE RESPONSIBILTIES PLAN

INDICATIVE

Maximum size U9 - U10
Mini Soccer Pitch
(54.9m x 36.6m)
Run Off (60.9m x 42.6m)

Maximum size U13 - U14
Community Soccer Pitch
(82m x 50m)
Run Off (88m x 56m)

Notes

1. Do not scale from this drawing. All dimensions shown are in metres unless noted otherwise.
2. This drawing has been based upon topographical survey information produced by both Brunel Surveys Ltd and Milton Keynes Surveys Ltd and Milestone Transport Planning cannot be held responsible for any discrepancies which may arise because of it.

Key

- S104 Foul Sewer and Manhole - Leep Utilities
- S38 drainage - West Sussex County Council
- S38 road drainage soakaways - West Sussex County Council
- G** S38 Highway Gully with 150mm Dia Connection Pipe - West Sussex County Council
- Private Foul - Home Owner / Management Company
- Private Storm - Home Owner / Management Company
- B Storm House Soakaway - Home Owner
- Private Road drainage soakaways - Management Company
- G** Private Road Gully with 150mm Dia Connection Pipe - Management Company
- Private Parking Permeable paving - Home Owner
- Shared Drive Permeable paving - Home Owner / Management Company

Ordnance Survey Licence number: 100057360

Drawing Revisions

Rev:	Drn:	Date:	Details	Chk:
P1	ST	14/08/2023	First issue	SRT

Client
Persimmon Homes
Thames Valley

Project
West Sompting, West Sussex

Title
Phase 1
Drainage Maintenance
Responsibilities Plan

MILESTONE TRANSPORT PLANNING
7 Ancells Court, Rye Close, Fleet, Hampshire, GU51 2UY
Tel: 01483 397888
Gateshead IBC, Mulgrave Terrace, Gateshead, NE8 1AN
Tel: 0191 338 7220
web: www.milestonetp.co.uk

Drawing Number: 601-190-105

Scale: 1:700 @ A1

Revision: P01

APPENDIX D

SURFACE WATER DRAINAGE CCTV SURVEY

Contract no:		***District:***	.	***Page No:***	Index
Customer:	J Reilly CE	***Division:***		***Site ID:***	AB 5746A
Catchment:	Not known	***Operator:***	STEVE	***Date:***	26:11:2024
Road:	Loose Lane			***Time:***	08:12
Place:	Sompting				

INDEX

Survey	*Start MH*	*End MH*	*Pipe size*	*Length*
1	*MH4/02*	*MH4/03*	*225*	*34.8M*
2	*MH4/01*	*MH4/03*	*225*	*60.4M*
3	*MH4/03*	*DD4/01*	*225*	*1.0M*
4	*MH4/04*	*DD4/01*	*225*	*5.7M*
5	*MH4/04*	*SA04*	*225*	*0.3M*
6	*MH4/05*	*SA04*	*225*	*0.3M*
7	*MH1/09*	*MH1/07*	*300*	*22.8M*
8	*MH1/09*	*MH1/10*	*300*	*9.3M*
9	*MH1/11*	*MH1/10*	*300*	*25.3M*
10	*MH1/11*	*MH1/12*	*300*	*21.9M*
11	*MH3/01*	*MH3/02*	*225*	*61.8M*
12	*MH3/02*	*MH3/03*	*225*	*23.8M*
13	*MH3/03*	*MH3/04*	*225*	*43.3M*
14	*DD3/01*	*MH3/04*	*225*	*1.4M*
15	*MH3/05*	*DD3/01*	*225*	*14.2M*
16	*MH3/05*	*SA03*	*225*	*0.8M*
17	*MH3/06*	*SA03*	*225*	*0.2M*
18	*MH2/01*	*MH2/02*	*225*	*22.2M*
19	*MH2/02*	*MH2/03*	*225*	*30.7M*
20	*MH2/03*	*MH2/04*	*225*	*24.9M*
21	*MH2/04*	*MH2/05*	*225*	*54.8M*
22	*DD2/01*	*MH3/05*	*225*	*1.9M*
23	*MH2/06*	*DD2/01*	*225*	*15.3M*
24	*MH2/06*	*SA2*	*225*	*0.4M*
25	*MH2/07*	*SA2*	*225*	*0.8M*
26	*MH1/08*	*MH1/09*	*225*	*33.8M*
27	*MH1/02*	*MH1/02*	*225*	*20.5M*
28	*MH1/02*	*MH1/03*	*225*	*23.1M*
29	*MH1/03*	*MH1/04*	*300*	*47.9M*
30	*MH1/04*	*MH1/05*	*300*	*9.0M*
31	*MH1/05*	*MH1/06*	*300*	*9.1M*
32	*MH1/06*	*MH1/07*	*300*	*23.6M*

Licensed to A B Pipelines

Contract no:		***District:***	.	***Page No:***	1-1
Customer:	J Reilly CE	***Division:***		***Site ID:***	AB 5746A
Catchment:	Not known	***Operator:***	STEVE	***Date:***	26:11:2024
Road:	Loose Lane			***Time:***	08:12
Place:	Sompting				
Start MH:	MH4/02	***Finish MH:***	MH4/03	***PLR:***	
Start Depth:	0.00M	***Finish Depth:***	0.00M	***Year Laid:***	Not known
Pipe Size 1:	225mm	***Material:***	Vitrified clay	***Direction:***	Downstream
Pipe Size 2:	0mm	***Lining:***	Not specified	***Weather:***	Not specified
Pipe Shape:	Circular	***Use:***	Surface water	***Location:***	-
Pipe Length:	0.00M	***Purpose:***	Assessment	***Total Length:***	34.8M
Comments:				***VT No:***	
				Video:	
Location				***Criticality:***	
Details:				***Precleansed:***	Not specified

Video Digit	***Photo No***	***Distance (Metres)***	***Cont Def***	***Description***		***Severity***
		0.0		ST	Start Survey.	0
		0.0		MH	Manhole. MH4/02	0
		0.0		WL	Water Level. 5% loss of diam.	0
		3.2		JN	Junction at 9 o'clock. Diameter 150mm.	0
		11.1		JN	Junction at 9 o'clock. Diameter 150mm.	0
		15.7		JN	Junction at 9 o'clock. Diameter 150mm.	0
		22.3		JN	Junction at 9 o'clock. Diameter 150mm.	0
		34.8		MH	Manhole. MH4/03	0
		34.8		FH	Finish Survey.	0

Licensed to A B Pipelines

Contract no:		***District:***	.	***Page No:***	2-1
Customer:	J Reilly CE	***Division:***		***Site ID:***	AB 5746A
Catchment:	Not known	***Operator:***	STEVE	***Date:***	26:11:2024
Road:	Loose Lane			***Time:***	10:12
Place:	Sompting				
Start MH:	MH4/01	***Finish MH:***	MH4/03	***PLR:***	
Start Depth:	0.00M	***Finish Depth:***	0.00M	***Year Laid:***	Not known
Pipe Size 1:	225mm	***Material:***	Vitrified clay	***Direction:***	Downstream
Pipe Size 2:	0mm	***Lining:***	Not specified	***Weather:***	Not specified
Pipe Shape:	Circular	***Use:***	Surface water	***Location:***	-
Pipe Length:	0.00M	***Purpose:***	Assessment	***Total Length:***	60.4M
Comments:				***VT No:***	
				Video:	
Location				***Criticality:***	-
Details:				***Precleansed:***	Not specified

Video Digit	***Photo No***	***Distance (Metres)***	***Cont***	***Def***	***Description***	***Severity***
		0.0		ST	Start Survey.	0
		0.0		MH	Manhole. MH4/01	0
		0.0		WL	Water Level. 5% loss of diam.	0
		5.7		JN	Junction at 9 o'clock. Diameter 150mm.	0
		18.4		JN	Junction at 9 o'clock. Diameter 150mm.	0
		33.2		JN	Junction at 3 o'clock. Diameter 150mm.	0
		41.9		JN	Junction at 3 o'clock. Diameter 150mm.	0
		52.6		JN	Junction at 3 o'clock. Diameter 150mm.	0
		60.4		MH	Manhole. MH4/03	0
		60.4		FH	Finish Survey.	0

Licensed to A B Pipelines

Contract no:		***District:***	.	***Page No:***	3-1
Customer:	J Reilly CE	***Division:***		***Site ID:***	AB 5746A
Catchment:	Not known	***Operator:***	STEVE	***Date:***	26:11:2024
Road:	Loose Lane			***Time:***	12:06
Place:	Sompting				
Start MH:	MH4/03	***Finish MH:***	DD4/01	***PLR:***	
Start Depth:	0.00M	***Finish Depth:***	0.00M	***Year Laid:***	Not known
Pipe Size 1:	225mm	***Material:***	Vitrified clay	***Direction:***	Downstream
Pipe Size 2:	0mm	***Lining:***	Not specified	***Weather:***	Not specified
Pipe Shape:	Circular	***Use:***	Surface water	***Location:***	-
Pipe Length:	0.00M	***Purpose:***	Assessment	***Total Length:***	1.0M
Comments:				***VT No:***	
				Video:	
Location				***Criticality:***	-
Details:				***Precleansed:***	Not specified

Video Digit	***Photo No***	***Distance (Metres)***	***Cont Def***	***Description***		***Severity***
		0.0		ST	Start Survey.	0
		0.0		MH	Manhole. MH4/03	0
		0.0		WL	Water Level. 5% loss of diam.	0
		1.0		MH	Manhole. DD4/01	0
		1.0		FH	Finish Survey.	0

Licensed to A B Pipelines

Contract no:		***District:***	.	***Page No:***	4-1
Customer:	J Reilly CE	***Division:***		***Site ID:***	AB 5746A
Catchment:	Not known	***Operator:***	STEVE	***Date:***	26:11:2024
Road:	Loose Lane			***Time:***	13:04
Place:	Sompting				
Start MH:	MH4/04	***Finish MH:***	DD4/01	***PLR:***	
Start Depth:	0.00M	***Finish Depth:***	0.00M	***Year Laid:***	Not known
Pipe Size 1:	225mm	***Material:***	Vitrified clay	***Direction:***	Upstream
Pipe Size 2:	0mm	***Lining:***	Not specified	***Weather:***	Not specified
Pipe Shape:	Circular	***Use:***	Surface water	***Location:***	-
Pipe Length:	0.00M	***Purpose:***	Assessment	***Total Length:***	5.7M
Comments:				***VT No:***	
				Video:	
Location				***Criticality:***	-
Details:				***Precleansed:***	Not specified

Video Digit	***Photo No***	***Distance (Metres)***	***Cont***	***Def***	***Description***	***Severity***
		0.0		ST	Start Survey.	0
		0.0		MH	Manhole. MH4/04	0
		0.0		WL	Water Level. 5% loss of diam.	0
		5.7		MH	Manhole. DD4/01	0
		5.7		FH	Finish Survey.	0

Licensed to A B Pipelines

Contract no:		***District:***	.	***Page No:***	5-1
Customer:	J Reilly CE	***Division:***		***Site ID:***	AB 5746A
Catchment:	Not known	***Operator:***	STEVE	***Date:***	26:11:2024
Road:	Loose Lane			***Time:***	13:09
Place:	Sompting				
Start MH:	MH4/04	***Finish MH:***	SA04	***PLR:***	
Start Depth:	0.00M	***Finish Depth:***	0.00M	***Year Laid:***	Not known
Pipe Size 1:	225mm	***Material:***	Vitrified clay	***Direction:***	Downstream
Pipe Size 2:	0mm	***Lining:***	Not specified	***Weather:***	Not specified
Pipe Shape:	Circular	***Use:***	Surface water	***Location:***	-
Pipe Length:	0.00M	***Purpose:***	Assessment	***Total Length:***	0.3M
Comments:				***VT No:***	
				Video:	
Location				***Criticality:***	-
Details:				***Precleansed:***	Not specified

Video Digit	***Photo No***	***Distance (Metres)***	***Cont Def***	***Description***		***Severity***
		0.0		ST	Start Survey.	0
		0.0		MH	Manhole. MH4/04	0
		0.0		WL	Water Level. 5% loss of diam.	0
		0.3		MH	Manhole. SA04	0
		0.3		FH	Finish Survey.	0

Licensed to A B Pipelines