

Catchpit Inspection Chamber in rear garden upstream of soakaway



Polystorm crates used for rear garden soakaways



Permeable Block Paving



Permeable Block Paving



Permeable Block Paving



Asphalt punctured prior to laying Permeable Block Paving



Asphalt punctured prior to laying Permeable Block Paving



Asphalt punctured prior to laying Permeable Block Paving



Asphalt punctured prior to laying Permeable Block Paving



Type 3 Granular Material



Type 3 Granular Material



Type 3 Granular Material



Type 3 Granular Material



Type 3 Granular Material



Type 3 Granular Material



Permeable Block Paving



Permeable Block Paving

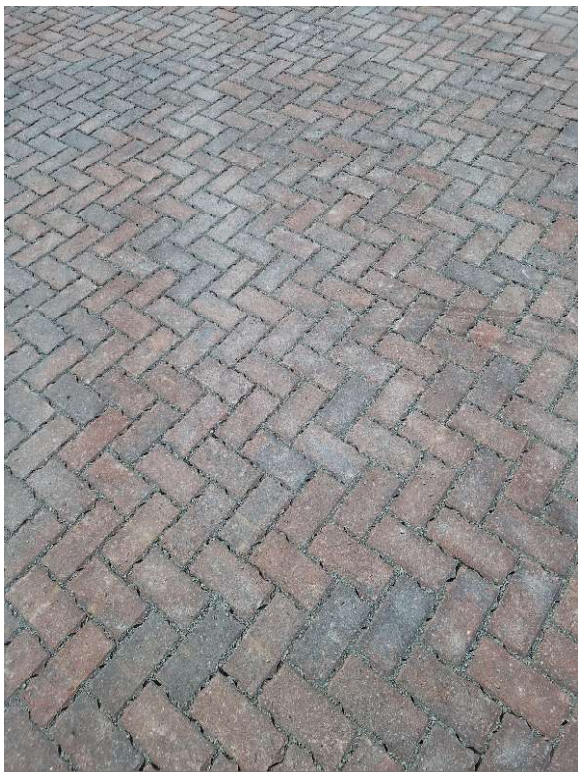

Permeable Block Paving



Permeable Block Paving

APPENDIX F

TECHNICAL DATA SHEETS AND PRODUCT ORDER NOTES

tcJS

Elliotts
help you build

Sales Invoice

Get in touch

[redacted]

JOHN REILLY C. E. LTD
09 AUG 2024

John Reilly Civil Eng Ltd
Barley House
Duncan Road
Park Gate
Southampton
Hampshire
SO31 1ZT

Delivery Address
Peter
S122 - Persimmon Homes
Thames Valley
Loose Lane
Sompting
Lancing
WEST SUSSEX
United Kingdom
BN15 0DQ
07854 998858

Invoice #	SI9137623
Invoice Date	08/08/2024
Order #	SO23290050
Sale Type	Direct
Branch	Sales Hub
Rep	Civils
Customer Code	REILLJ
Your Ref	S122/3770AF

Line	Description	Qty	Per	Unit Price	Total	VAT	Rate
1	Manhole ref: DD4/01 1.0m Downstream Defender Select AV - Concrete - Advanced Vortex DDC10-620-C-225	1	Each				20%
2	Manhole ref: DD3/01	1	Each				20%
3	DN1200 T1 Cover Slab w/ rebate for chamber ring	1	Each				20%
4	1.0m x 0.25m Sealed Manhole Ring	3	Each				20%
5	Set of 3 no. 2.5T DEHA head links	1	Each				20%
6	Manhole ref: DD2/01	1	Each				20%
7	Manhole ref: DD4/01	1	Each				20%
8	DN1200 T1 Cover Slab w/ rebate for chamber ring	1	Each				20%
9	Transport Direct Delivery Ticket Number: Hydro International (UK) Ltd - SOR-028355 01/08/24	2	Each				20%

535228

Total Amount	
Delivery	
Total VAT	
Invoice Total	

BMT-PEFC-COC-1106
TT-COC-003899

Our BACS details are:
HSBC Bank, Account No: 00102025, Sort Code: 40-61-35
Terms : Payment is due by end of month following Invoice date.
Title of goods does not pass until payment has been received. Subject to our terms and conditions of sale,available at elliotts.uk/terms-conditions.

Elliott Brothers Ltd, Millbank Wharf, Northam, Southampton SO14 5AG
Company registered in England no 2511005 VAT registration no 188 0941 32



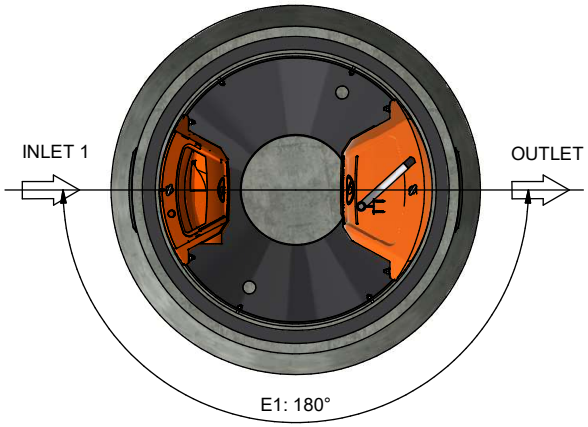

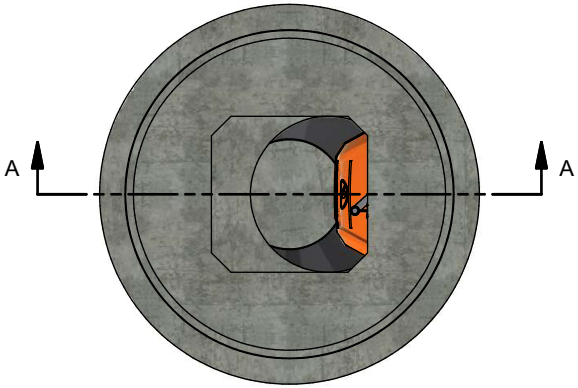

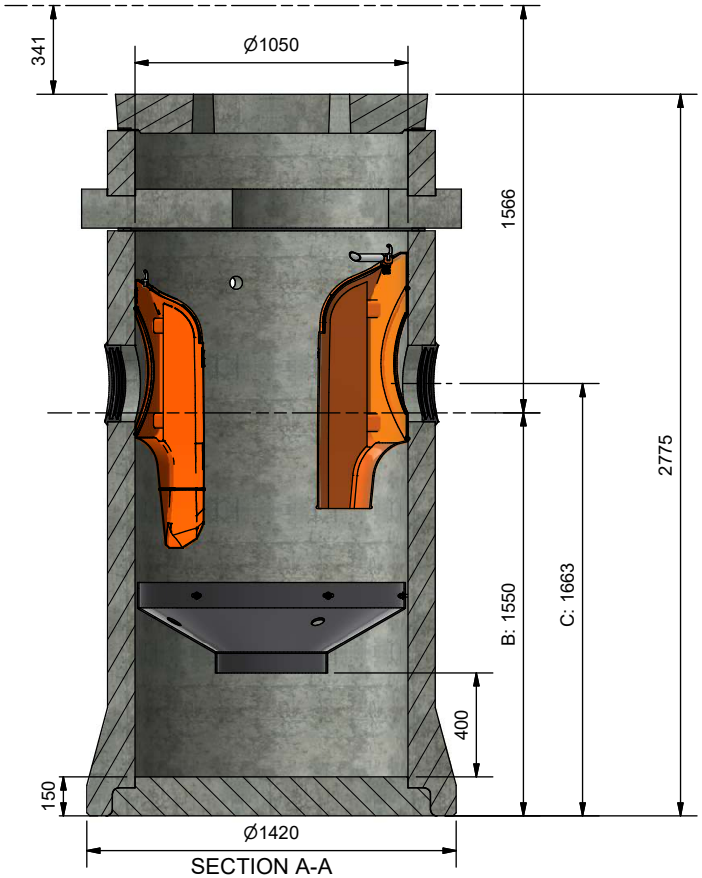

Note:

1. Angles can be adjusted to suit.
2. Minimum angle between inlets and outlet is 90~.
3. Maximum number of inlets is 3.
4. Cover and frame by others.

-	ANGLE (E)	PIPE ID	PIPE OD	CORE HOLE DIA (F)	Core Centre Height (C)	PIPE TYPE
OUTLET	0	225	263	294	1663	Wavin Hepworth Supersleeve
INLET 1	180	225	263	294	1663	Wavin Hepworth Supersleeve

Cover Level	9.235
Invert Level	7.669

REVISION HISTORY

REV	BY	CHK	APP	DESCRIPTION	DATE
-	HFT			FIRST RELEASE	10/06/2024

PROJECTION

IF IN DOUBT ASK

DATE:	SCALE: 1:25
DRAWN BY: HFT	CHECKED BY:
APPROVED BY	

Title
23_21_5230

West Sompting West Sussex

Downstream Defender Select 1000 Concrete, Advanced Vortex

DD 3/01

Hydro International

hydro-int.com

©2022 HYDRO INTERNATIONAL

WEIGHT: N/A	MATERIAL:
STOCK NUMBER:	
DRAWING NO.: 23_21_5230-1000CAV	
SHEET SIZE: A3	SHEET: 1 OF 1
Rev: -	



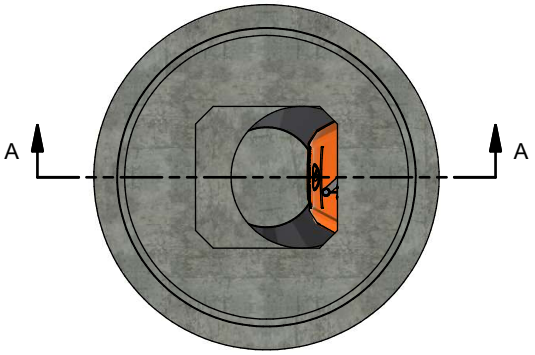

Note:

1. Angles can be adjusted to suit.
2. Minimum angle between inlets and outlet is 90~.
3. Maximum number of inlets is 3.
4. Cover and frame by others.

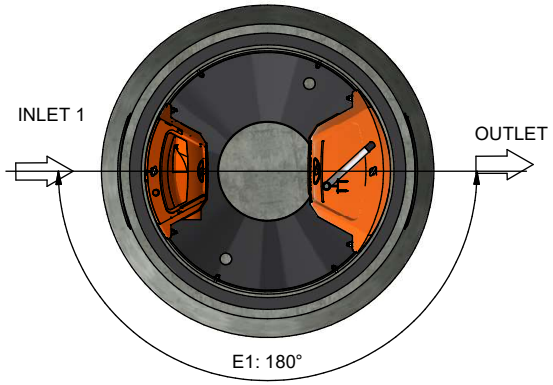

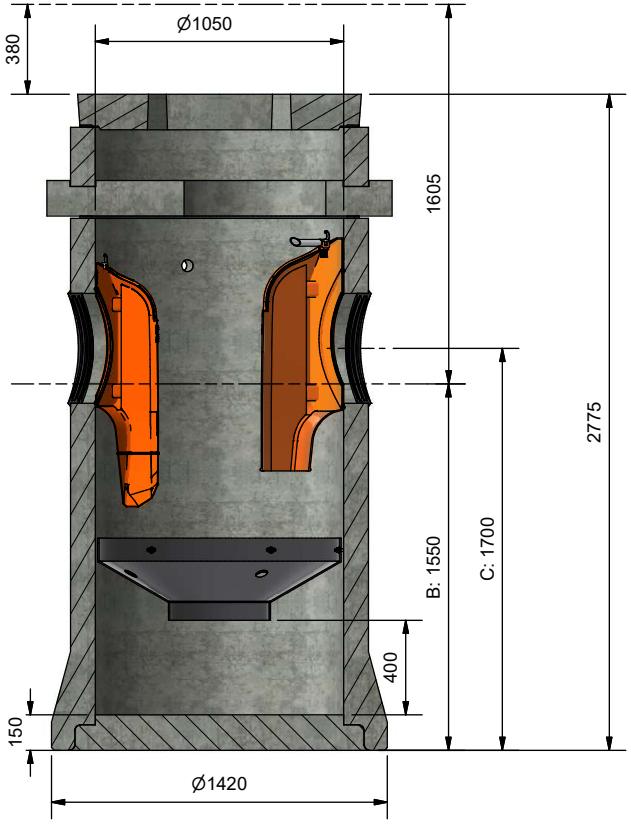

SECTION A-A

-	ANGLE (E)	PIPE ID	PIPE OD	CORE HOLE DIA (F)	Core Centre Height (C)	PIPE TYPE
OUTLET	0	300	416	465	1700	Concrete- Marshalls
INLET 1	180	300	416	465	1700	Concrete- Marshalls

Cover Level	7.350
Invert Level	5.745

REVISION HISTORY

REV	BY	CHK	APP	DESCRIPTION	DATE
-	HFT			FIRST RELEASE	10/06/2024

PROJECTION

IF IN DOUBT ASK

DATE:	SCALE: 1:25

DRAWN BY:	CHECKED BY:	APPROVED BY
HFT		

Title
23_21_5230
West Sompting West Sussex
Downstream Defender Select 1000 Concrete, Advanced Vortex
DD 4/01 A

Hydro International
hydro-int.com
©2022 HYDRO INTERNATIONAL

WEIGHT:	MATERIAL:
N/A	

STOCK NUMBER:

DRAWING NO.:
23_21_5230-1000CAV

SHEET SIZE:	SHEET:	Rev:
A3	1 OF 1	-



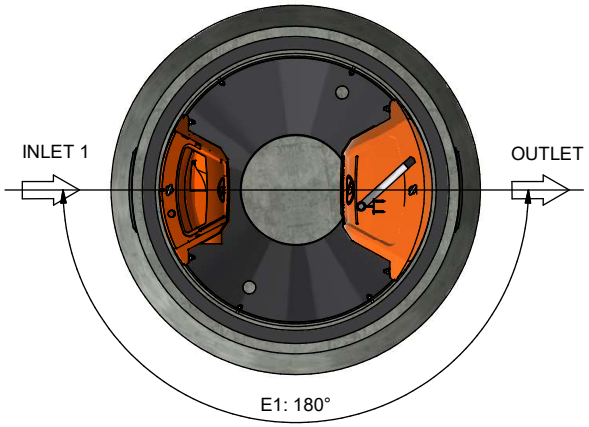

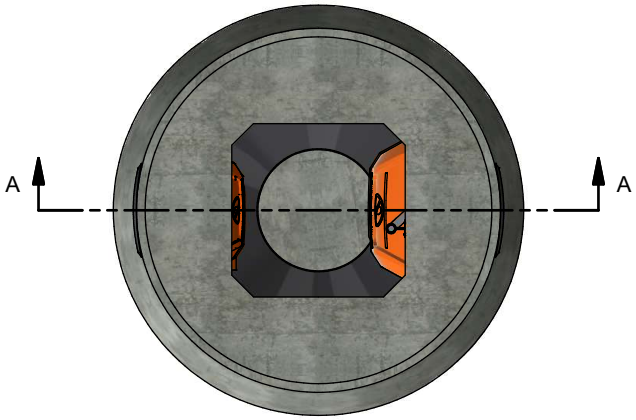

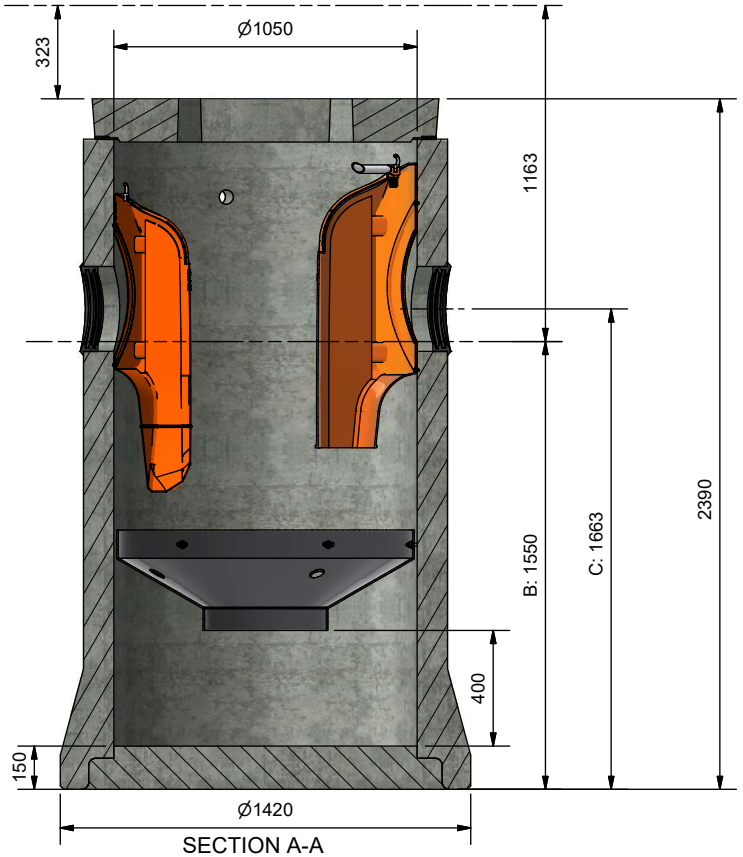

SECTION A-A

Note:

1. Angles can be adjusted to suit.
2. Minimum angle between inlets and outlet is 90~.
3. Maximum number of inlets is 3.
4. Cover and frame by others.

-	ANGLE (E)	PIPE ID	PIPE OD	CORE HOLE DIA (F)	Core Centre Height (C)	PIPE TYPE
OUTLET	0	225	263	294	1663	Wavin Hepworth Supersleeve
INLET 1	180	225	263	294	1663	Wavin Hepworth Supersleeve

Cover Level	9.500
Invert Level	8.337

REVISION HISTORY

REV	BY	CHK	APP	DESCRIPTION	DATE
-	HFT			FIRST RELEASE	10/06/2024

PROJECTION

IF IN DOUBT ASK

DATE:	SCALE: 1:25

DRAWN BY:	CHECKED BY:	APPROVED BY
HFT		

Title
23_21_5230

West Sompting West Sussex

Downstream Defender Select 1000 Concrete, Advanced Vortex

DD 4/01

Hydro International

hydro-int.com

©2022 HYDRO INTERNATIONAL

WEIGHT:	MATERIAL:
N/A	

STOCK NUMBER:

DRAWING NO.:
23_21_5230-1000CAV

SHEET SIZE:	SHEET:	Rev:
A3	1 OF 1	-

1 x JS

Keyline
CIVILS SPECIALIST

INVOICE 6854 AAZ702

Keyline Civils Specialist Limited
VAT Registration Number : GB 408 5567 37
Cheques Payable to : Keyline Civils Specialist Ltd.
50 MAUCHLINE STREET

GLASGOW , G5 8HQ

JOHN REILLY C. E. LTD
24 JAN 2024

INVOICE/TAX DATE : 18/01/24
DELIVERY NOTE : G23290
DELIVERY DATE : 18/01/24
ORDER NO. : S122/374023
ACCOUNT NO : 615169
REGION : 005

John Reilly CE Ltd
Southern Division
Barley House
Duncan Road, Parkgate
Southampton, Hampshire
SO31 1ZT

DELIVERED TO :
S122, C/O PERSIMMON HOMES
THAMES VALLEY, WEST STREET
WEST SOMPTING
WEST SUSSEX, BN15 0GN

ITEM CODE	DESCRIPTION OF GOODS	QUANTITY PER	PRICE PER	VALUE £	VAT %
173506	HEPWORTH SUPERSLEVE 225 PIPE SINGLE COUPLING 225X2M SP4S	230.00 EACH			20.00
505672	HEPWORTH SUPERSLEVE 225 PIPE CU SQUARE JUNCTION SINGLE COUPLING 225X150 SJ3/8S	35.00 EACH			20.00
505659	HEPWORTH SUPERSLEVE 225 EPDM COUPLING 225 SC1/5	100.00 EACH			20.00
712010	HEPWORTH SUPERSLEVE 150 15DEG BEND SB4/2	20.00 EACH			20.00
712009	HEPWORTH SUPERSLEVE 150 30DEG BEND SB3/2	20.00 EACH			20.00
711222	HEPWORTH SUPERSLEVE 150 45DEG BEND SB2/2	20.00 EACH			20.00
711238	HEPWORTH SUPERSLEVE/SEAL 150 COUPLING EPDM RINGS SC1/2	75.00 EACH			20.00
711280	HEPWORTH SUPERSLEVE LUBRICANT 2.5KG SL2	5.00 EACH			20.00

WAVIN LTD
DEL NOTE NO 5115270930
Branch :
BASINGSTOKE KEYLINE DIRECT
KEYLINE PLASTICS SPECIALIST
RANKINE ROAD
DANESHILL WEST IND EST
BASINGSTOKE
RG24 8SH
0

GOODS AMOUNT	
VAT TOTAL	
INVOICE TOTAL	

TERMS NET MONTHLY

Health & Safety: For information on products (e.g. COSHH) please visit www.keyline.co.uk. Contact the H&S Dept. during office hours on (01604) 752424 if data not available.

Pay your account balance online at:
www.keyline.co.uk

518467

Elliotts
help you build

Sales Invoice

Get in touch

[redacted]

JOHN REILLY C. E. LTD
04 APR 2024

John Reilly Civil Eng Ltd
Barley House
Duncan Road
Park Gate
SOUTHAMPTON
SO31 1ZT

Delivery Address
S122 - Persimmon Homes
Thames Valley
West Street (Or Loose
Lane).
Sompting
Lancing
WEST SUSSEX
United Kingdom
BN15 0GN

Invoice #	**SI8998498**
Invoice Date	28/03/2024
Order #	SO23226465
Sale Type	Delivery
Branch	Fareham
Rep	Civils
Customer Code	REILLJ
Your Ref	S122/3910

Line	Description	Qty	Per	Unit Price	Total	VAT	Rate
1	62427 Wrekin GTSG/FASTRACK/C Black Fastrack 609 Woven 100x4.5mtr Roll	4	Each				20%
2	97928 19 x 38 Sawn Treated Batten - 70% PEFC certified 20.00 pcs 20/4.8	96	Metre				20%

524095

Total Amount	
Delivery	
Total VAT	
Invoice Total	

BMT-PEFC-COC-1106
TT-COC-003899

Our BACS details are:
HSBC Bank, Account No: 00102025, Sort Code: 40-61-35
Terms : Payment is due by end of month following Invoice date.
Title of goods does not pass until payment has been received. Subject to our terms and conditions of sale,available at elliotts.uk/terms-conditions.

FasTrack 609

Polypropylene Woven Geotextile, 1500N, 75g/m² - 4.5m x 100m roll



PRODUCT NAME	DESCRIPTION
FasTrack 609	Polypropylene Woven Geotextile, 1500N, 75g/m² - 4.5m x 100m roll

Details

Third party certified		CE UKCA
Tensile strength (MD)	EN ISO 10319	18kN/m
Tensile strength (CMD)	EN ISO 10319	10kN/m
Elongation at max load (MD)	EN ISO 10319	25%
Elongation at max load (CMD)	EN ISO 10319	25%
Dynamic perforation resistance	EN ISO 13433	19mm
CBR puncture resistance	EN ISO 12236	1500N
Dynamic cone drop	EN ISO 13433	19mm
Water permeability	EN ISO 11058	16L/m².s
Characteristic opening size	EN ISO 12956	300µm
Weight	EN ISO 9864	75g/m²
Roll width		4.5m
Roll length		100m

1. Wrekin Products Ltd is continually seeking to improve our products and therefore reserves the right to alter product specifications without prior notice.
2. It is the responsibility of all users to satisfy themselves the above data is current.
3. Installation details are available on request.

SALES INVOICE

DAY GROUP LTD

Transport Avenue
Brentford
Middlesex
TW8 9HF

T 020 8380 9600
E salesledger@daygroup.co.uk
W www.daygroup.co.uk

INVOICE ADDRESS	SITE ADDRESS
JOHN REILLY CIVIL ENGINEERING LIMITED BARLEY HOUSE DUNCAN ROAD SOUTHAMPTON HANTS SO31 1ZT	LOOSE LANE NEW SITE SOMPTING WEST SUSSEX BN15 0BG JOHN REILLY C. E. LTD 16 JUN 2025

86

ACCOUNT NUMBER	CUSTOMER ORDER NUMBER	PROJECT NUMBER	INVOICE DATE	INVOICE NUMBER
18102	S122310 3370	DQ00081614	10/06/25	2503843

TICKET	SHIPPED	DESCRIPTION	CODE	QUANTITY	UNIT PRICE	VALUE
5254021	10/06/25	TYPE 3 (SHW805) PRIMARY (P)	601	19.44		
5254089	10/06/25	TYPE 3 (SHW805) PRIMARY (P)	601	19.26		
5254399	10/06/25	TYPE 3 (SHW805) PRIMARY (P)	601	19.34		
5254487	10/06/25	TYPE 3 (SHW805) PRIMARY (P)	601	19.46		
			Sub-Total:	77.50		

022766

Total Quantity: 77.50

NOTES
This price will include a surcharge if ordered in quantities of less than 20 tonnes.
Quantity = Tonnes, unless stated otherwise in description.
Payment Terms: 45 days from end of month
Job No:

Bank Details: Barclays Bank PLC, Sort Code: 20-42-81, Account No: 20304018

TOTAL EXC. VAT	
VAT @ 20%	
TOTAL GBP	

SALES INVOICE

DAY GROUP LTD

Transport Avenue
Brentford
Middlesex
TW8 9HF

T 020 8380 9600
E salesledger@daygroup.co.uk
W www.daygroup.co.uk

INVOICE ADDRESS	SITE ADDRESS
JOHN REILLY CIVIL ENGINEERING LIMITED BARLEY HOUSE DUNCAN ROAD SOUTHAMPTON HANTS SO31 1ZT	LOOSE LANE NEW SITE SOMPTING WEST SUSSEX BN15 0BG JOHN REILLY C. E. LTD 12 DEC 2024

ACCOUNT NUMBER	CUSTOMER ORDER NUMBER	PROJECT NUMBER	INVOICE DATE	INVOICE NUMBER
18102	S122/3360DD	DQ00081614	07/12/24	2439148

TICKET	SHIPPED	DESCRIPTION	CODE	QUANTITY	UNIT PRICE	VALUE
5137922	04/12/24	TYPE 3 (SHW805) PRIMARY (LS)	202	19.22		
5137949	04/12/24	TYPE 3 (SHW805) PRIMARY (LS)	202	19.28		
5138051	04/12/24	TYPE 3 (SHW805) PRIMARY (LS)	202	19.48		
5138090	04/12/24	TYPE 3 (SHW805) PRIMARY (LS)	202	19.08		
5138248	04/12/24	TYPE 3 (SHW805) PRIMARY (LS)	202	19.08		
5138377	04/12/24	TYPE 3 (SHW805) PRIMARY (LS)	202	19.36		
5138426	04/12/24	TYPE 3 (SHW805) PRIMARY (LS)	202	19.10		
5138516	04/12/24	TYPE 3 (SHW805) PRIMARY (LS)	202	19.00		
5138603	04/12/24	TYPE 3 (SHW805) PRIMARY (LS)	202	19.38		
5138664	04/12/24	TYPE 3 (SHW805) PRIMARY (LS)	202	19.08		
			Sub-Total:	192.06		

008312

Total Quantity: 192.06

NOTES
This price will include a surcharge if ordered in quantities of less than 20 tonnes.
Quantity = Tonnes, unless stated otherwise in description.
Payment Terms: 45 days from end of month
Job No:

Bank Details: Barclays Bank PLC, Sort Code: 20-42-81, Account No: 20304018

TOTAL EXC. VAT	
VAT @ 20%	
TOTAL GBP	

SALES INVOICE

DAY GROUP LTD

Transport Avenue
Brentford
Middlesex
TW8 9HF

T 020 8380 9600
salesledger@daygroup.co.uk
www.daygroup.co.uk

INVOICE ADDRESS	SITE ADDRESS
JOHN REILLY CIVIL ENGINEERING LIMITED BARLEY HOUSE DUNCAN ROAD SOUTHAMPTON HANTS SO31 1ZT	LOOSE LANE NEW SITE JOHN REILLY C. E. LTD SOMPTING WEST SUSSEX BN15 0BG 13 JAN 2025

ACCOUNT NUMBER	CUSTOMER ORDER NUMBER	PROJECT NUMBER	INVOICE DATE	INVOICE NUMBER
18102	S122/3318 60	DQ00081614	07/01/25	2445846

TICKET	SHIPPED	DESCRIPTION	CODE	QUANTITY	UNIT PRICE	VALUE
5151918	07/01/25	TYPE 3 (SHW805) PRIMARY (LS)	258	19.32		
5151933	07/01/25	TYPE 3 (SHW805) PRIMARY (LS)	258	19.60		
5152206	07/01/25	TYPE 3 (SHW805) PRIMARY (LS)	258	19.46		
			Sub-Total:	58.38		

010603

Total Quantity: 58.38

NOTES
This price will include a surcharge if ordered in quantities of less than 20 tonnes.
Quantity = Tonnes, unless stated otherwise in description.
Payment Terms: 45 days from end of month
Job No:

Bank Details: Barclays Bank PLC, Sort Code: 20-42-81, Account No: 20304018

TOTAL EXC. VAT	
VAT @ 20%	
TOTAL GBP	

SALES INVOICE

DAY GROUP LTD

Transport Avenue
Brentford
Middlesex
TW8 9HF

T 020 8380 9600
E salesledger@daygroup.co.uk
W www.daygroup.co.uk

INVOICE ADDRESS	SITE ADDRESS
JOHN REILLY CIVIL ENGINEERING LIMITED BARLEY HOUSE DUNCAN ROAD SOUTHAMPTON HANTS SO31 1ZT	PERSSIMONS WEST STREET WEST STREET SOMPTING BN15 0GN JOHN REILLY C. E. LTD 27 JAN 2025

ACCOUNT NUMBER	CUSTOMER ORDER NUMBER	PROJECT NUMBER	INVOICE DATE	INVOICE NUMBER
18102	S122/~~3810~~ 3360	DQ00094066	21/01/25	2450211

TICKET	SHIPPED	DESCRIPTION	CODE	QUANTITY	UNIT PRICE	VALUE
5160012	20/01/25	TYPE 3 (SHW805) PRIMARY (LS)	436	19.66		
5160058	20/01/25	TYPE 3 (SHW805) PRIMARY (LS)	436	19.52		
5160603	20/01/25	TYPE 3 (SHW805) PRIMARY (LS)	436	19.42		
			Sub-Total:	58.60		

011954

Total Quantity: 58.60

NOTES
This price will include a surcharge if ordered in quantities of less than 20 tonnes.
Quantity = Tonnes, unless stated otherwise in description.
Payment Terms: 45 days from end of month
Job No:

Bank Details: Barclays Bank PLC, Sort Code: 20-42-81, Account No: 20304018

TOTAL EXC. VAT	
VAT @ 20%	
TOTAL GBP	

JOHN REILLY C. E. LTD

26 MAR 2025

SALES INVOICE

DAY GROUP LTD

Transport Avenue
Brentford
Middlesex
TW8 9HF

T 020 8380 9600
salesledger@daygroup.co.uk
www.daygroup.co.uk

INVOICE ADDRESS	SITE ADDRESS
JOHN REILLY CIVIL ENGINEERING LIMITED BARLEY HOUSE DUNCAN ROAD SOUTHAMPTON HANTS SO31 1ZT	PERSSIMONS WEST STREET WEST STREET SOMPTING BN15 0GN

ACCOUNT NUMBER	CUSTOMER ORDER NUMBER	PROJECT NUMBER	INVOICE DATE	INVOICE NUMBER
18102	~~S1228310~~	DQ00094066	20/03/25	2472192

TICKET	SHIPPED	DESCRIPTION	CODE	QUANTITY	UNIT PRICE	VALUE
5200076	19/03/25	TYPE 3 (SHW805) PRIMARY (P)	584	19.62		
5200270	19/03/25	TYPE 3 (SHW805) PRIMARY (P)	584	19.30		
			Sub-Total:	38.92		

S122/3360

016057

Total Quantity: 38.92

NOTES
This price will include a surcharge if ordered in quantities of less than 20 tonnes.
Quantity = Tonnes, unless stated otherwise in description.
Payment Terms: 45 days from end of month
Job No:

Bank Details: Barclays Bank PLC, Sort Code: 20-42-81, Account No: 20304018

TOTAL EXC. VAT	
VAT @ 20%	
TOTAL GBP	

SALES INVOICE

DAY GROUP LTD

Transport Avenue
Brentford
Middlesex
TW8 9HF

020 8380 9600
salesledger@daygroup.co.uk
www.daygroup.co.uk

INVOICE ADDRESS	SITE ADDRESS
JOHN REILLY CIVIL ENGINEERING LIMITED BARLEY HOUSE DUNCAN ROAD SOUTHAMPTON HANTS SO31 1ZT	PERSSIMONS WEST STREET WEST STREET SOMPTING BN15 0GN JOHN REILLY C. E. LTD 17 APR 2025

ACCOUNT NUMBER	CUSTOMER ORDER NUMBER	PROJECT NUMBER	INVOICE DATE	INVOICE NUMBER
18102	S1223310	DQ00094066	12/04/25	2480105

TICKET	SHIPPED	DESCRIPTION	CODE	QUANTITY	UNIT PRICE	VALUE
5212273	07/04/25	TYPE 3 (SHW805) PRIMARY (P)	544	19.42		
5212296	07/04/25	TYPE 3 (SHW805) PRIMARY (P)	544	19.62		
			Sub-Total:	39.04		

S122/3360

019482

Total Quantity: 39.04

NOTES
This price will include a surcharge if ordered in quantities of less than 20 tonnes.
Quantity = Tonnes, unless stated otherwise in description.
Payment Terms: 45 days from end of month
Job No:

Bank Details: Barclays Bank PLC, Sort Code: 20-42-81, Account No: 20304018

TOTAL EXC. VAT	
VAT @ 20%	
TOTAL GBP	

SALES INVOICE

DAY GROUP LTD

Transport Avenue
Brentford
Middlesex
TW8 9HF

T 020 8380 9600
E salesledger@daygroup.co.uk
W www.daygroup.co.uk

INVOICE ADDRESS	SITE ADDRESS
JOHN REILLY CIVIL ENGINEERING LIMITED BARLEY HOUSE DUNCAN ROAD SOUTHAMPTON HANTS SO31 1ZT	LOOSE LANE NEW SITE SOMPTING WEST SUSSEX BN15 0BG JOHN REILLY C. E. LTD 23 APR 2025

ACCOUNT NUMBER	CUSTOMER ORDER NUMBER	PROJECT NUMBER	INVOICE DATE	INVOICE NUMBER
18102	S122~~3410~~ 13360	DQ00081614	17/04/25	2482744

TICKET	SHIPPED	DESCRIPTION	CODE	QUANTITY	UNIT PRICE	VALUE
5217386	14/04/25	TYPE 3 (SHW805) PRIMARY (P)	634	19.40		
5217876	14/04/25	TYPE 3 (SHW805) PRIMARY (P)	634	19.20		
			Sub-Total:	38.60		

019593

Total Quantity: 38.60

NOTES
This price will include a surcharge if ordered in quantities of less than 20 tonnes.
Quantity = Tonnes, unless stated otherwise in description.
Payment Terms: 45 days from end of month
Job No:

Bank Details: Barclays Bank PLC, Sort Code: 20-42-81, Account No: 20304018

TOTAL EXC. VAT	
VAT @ 20%	
TOTAL GBP	

SALES INVOICE

DAY GROUP LTD

Transport Avenue
Brentford
Middlesex
TW8 9HF

020 8380 9600
salesledger@daygroup.co.uk
www.daygroup.co.uk

INVOICE ADDRESS	SITE ADDRESS
JOHN REILLY CIVIL ENGINEERING LIMITED BARLEY HOUSE DUNCAN ROAD SOUTHAMPTON HANTS SO31 1ZT	LOOSE LANE NEW SITE SOMPTING WEST SUSSEX BN15 0BG

ACCOUNT NUMBER	CUSTOMER ORDER NUMBER	PROJECT NUMBER	INVOICE DATE	INVOICE NUMBER
18102	S122/3360	DQ00081614	26/04/25	2485111

TICKET	SHIPPED	DESCRIPTION	CODE	QUANTITY	UNIT PRICE	VALUE
5178869	17/02/25	TYPE 3 (SHW805) PRIMARY (LS)	209R	19.16		
5179289	17/02/25	TYPE 3 (SHW805) PRIMARY (LS)	209R	19.22		
5179315	17/02/25	TYPE 3 (SHW805) PRIMARY (LS)	209R	19.32		
			Sub-Total:	57.70		

JOHN REILLY C. E. LTD
30 APR 2025

019548

Total Quantity: 57.70

NOTES
This price will include a surcharge if ordered in quantities of less than 20 tonnes.
Quantity = Tonnes, unless stated otherwise in description.
Payment Terms: 45 days from end of month
Job No:
Applies to Invoice No. 2460016
Bank Details: Barclays Bank PLC, Sort Code: 20-42-81, Account No: 20304018

TOTAL EXC. VAT	
VAT @ 20%	
TOTAL GBP	

Keyline
CIVILS SPECIALIST

Keyline Civils Specialist Limited
VAT Registration Number : GB 408 5567 37
Cheques Payable to : Keyline Civils Specialist Ltd.
50 MAUCHLINE STREET
GLASGOW , G5 8HQ

INVOICE 6848 AAN193

INVOICE/TAX DATE : 10/06/24
DELIVERY NOTE : G06482
DELIVERY DATE : 10/06/24
ORDER NO. : S122/370539
ACCOUNT NO : 615169
REGION : 005

JOHN REILLY C. E. LTD
14 JUN 2024

John Reilly CE Ltd
Southern Division
Barley House
Duncan Road, Parkgate
Southampton, Hampshire
SO31 1ZT

DELIVERED TO :
S122, C/O PERSIMMON HOMES
THAMES VALLEY, LOOSE LANE
Sompting
LANCING West Sussex , BN15 0GN

ITEM CODE	DESCRIPTION OF GOODS	QUANTITY PER	PRICE PER	VALUE £	VAT %
877957	POLYPIPE POLYSTORM CELL ASSEMBLY 61T RECYCLED MAT PSM1A 1000MMX500MMX400MM	390.00 EACH	EACH		20.00

GOODS AMOUNT	
VAT TOTAL	
INVOICE TOTAL	

POLYPIPE CIVILS Date:10/06/24
Del Nt:10054811
Branch :
SE & SOUTH REGIONAL OFFICE DIR
KEYLINE CIVILS SPECIALIST LTD
RANKINE ROAD
DANESHILL WEST IND EST
BASINGSTOKE
RG24 8SH
01256 682147

TERMS NET MONTHLY

Health & Safety: For information on products (e.g. COSHH) please visit www.keyline.co.uk. Contact the H&S Dept. during office hours on (01604) 752424 if data not available.

Pay your account balance online at:
www.keyline.co.uk

529907

Keyline
CIVILS SPECIALIST

Keyline Civils Specialist Limited
VAT Registration Number : GB 408 5567 37
Cheques Payable to : Keyline Civils Specialist Ltd.
50 MAUCHLINE STREET

GLASGOW , G5 8HQ

JOHN REILLY C. E. LTD
17 JUN 2024

INVOICE 6848 AAN209

INVOICE/TAX DATE : 12/06/24
DELIVERY NOTE : G06483
DELIVERY DATE : 12/06/24
ORDER NO. : S122/370539
ACCOUNT NO : 615169
REGION : 005

John Reilly CE Ltd
Southern Division
Barley House
Duncan Road, Parkgate
Southampton, Hampshire
SO31 1ZT

DELIVERED TO :
S122, C/O PERSIMMON HOMES
THAMES VALLEY, LOOSE LANE
Sompting
LANCING West Sussex , BN15 0GN

ITEM CODE	DESCRIPTION OF GOODS	QUANTITY PER	PRICE PER	VALUE £	VAT %
877957	POLYPIPE POLYSTORM CELL ASSEMBLY 61T RECYCLED MAT PSM1A 1000MMX500MMX400MM	174.00 EACH	EACH		20.00

POLYPIPE CIVILS Date:12/06/24
Del Nt:10058876
Branch :
SE & SOUTH REGIONAL OFFICE DIR
KEYLINE CIVILS SPECIALIST LTD
RANKINE ROAD
DANESHILL WEST IND EST
BASINGSTOKE
RG24 8SH
01256 682147

GOODS AMOUNT	
VAT TOTAL	
INVOICE TOTAL	

TERMS NET MONTHLY

Health & Safety: For information on products (e.g. COSHH) please visit www.keyline.co.uk. Contact the H&S Dept. during office hours on (01604) 752424 if data not available.

Pay your account balance online at:
www.keyline.co.uk

529905

Keyline
CIVILS SPECIALIST

Keyline Civils Specialist Limited
VAT Registration Number : GB 408 5567 37
Cheques Payable to : Keyline Civils Specialist Ltd.
50 MAUCHLINE STREET

GLASGOW , G5 8HQ

INVOICE 6848 AAN123

INVOICE/TAX DATE : 05/06/24
DELIVERY NOTE : G01379
DELIVERY DATE : 05/06/24
ORDER NO. : S122/370539
ACCOUNT NO : 615169
REGION : 005

John Reilly CE Ltd
Southern Division
Barley House
Duncan Road, Parkgate
Southampton, Hampshire
SO31 1ZT

JOHN REILLY C. E. LTD
07 JUN 2024

DELIVERED TO :
S122, C/O PERSIMMON HOMES
THAMES VALLEY, LOOSE LANE
Sompting
LANCING West Sussex , BN15 0GN

ITEM CODE	DESCRIPTION OF GOODS	QUANTITY PER	PRICE PER	VALUE £	VAT %
877957	POLYPIPE POLYSTORM CELL ASSEMBLY 61T RECYCLED MAT PSM1A 1000MMX500MMX400MM	390.00 EACH	EACH		20.00

POLYPIPE CIVILS Date:05/06/24
Del Nt:10050491
Branch :
SE & SOUTH REGIONAL OFFICE DIR
KEYLINE CIVILS SPECIALIST LTD
RANKINE ROAD
DANESHILL WEST IND EST
BASINGSTOKE
RG24 8SH
01256 682147

GOODS AMOUNT	
VAT TOTAL	
INVOICE TOTAL	

TERMS NET MONTHLY

Health & Safety: For information on products (e.g. COSHH) please visit www.keyline.co.uk. Contact the H&S Dept. during office hours on (01604) 752424 if data not available.

Pay your account balance online at:
www.keyline.co.uk

529881

Keyline
CIVILS SPECIALIST

INVOICE 6848 AAN110

Keyline Civils Specialist Limited
VAT Registration Number : GB 408 5567 37
Cheques Payable to : Keyline Civils Specialist Ltd.
50 MAUCHLINE STREET

GLASGOW , G5 8HQ

JOHN REILLY C. E. LTD
04 JUN 2024

INVOICE/TAX DATE : 03/06/24
DELIVERY NOTE : G01378
DELIVERY DATE : 03/06/24
ORDER NO. : S122/370539
ACCOUNT NO : 615169
REGION : 005

John Reilly CE Ltd
Southern Division
Barley House
Duncan Road, Parkgate
Southampton, Hampshire
SO31 1ZT

DELIVERED TO :
S122, C/O PERSIMMON HOMES
THAMES VALLEY, LOOSE LANE
Sompting
LANCING West Sussex , BN15 0GN

ITEM CODE	DESCRIPTION OF GOODS	QUANTITY PER	PRICE PER	VALUE £	VAT %
877957	POLYPIPE POLYSTORM CELL ASSEMBLY 61T RECYCLED MAT PSM1A 1000MMX500MMX400MM	390.00 EACH	EACH		20.00

POLYPIPE CIVILS Date:03/06/24
Del Nt:10047948
Branch :
SE & SOUTH REGIONAL OFFICE DIR
KEYLINE CIVILS SPECIALIST LTD
RANKINE ROAD
DANESHILL WEST IND EST
BASINGSTOKE
RG24 8SH
01256 682147

GOODS AMOUNT	
VAT TOTAL	
INVOICE TOTAL	

TERMS NET MONTHLY

Health & Safety: For information on products (e.g. COSHH) please visit www.keyline.co.uk. Contact the H&S Dept. during office hours on (01604) 752424 if data not available.

Pay your account balance online at:
www.keyline.co.uk

529895

SOAK AWAY MOS .

Keyline
CIVILS SPECIALIST

Keyline Civils Specialist Limited
VAT Registration Number : GB 408 5567 37
Cheques Payable to : Keyline Civils Specialist Ltd.
50 MAUCHLINE STREET

GLASGOW , G5 8HQ

JOHN REILLY C. E. LTD

INVOICE 6848 AAM824

INVOICE/TAX DATE : 13/05/24
DELIVERY NOTE : G01371
DELIVERY DATE : 13/05/24
ORDER NO. : S122/370539
ACCOUNT NO : 615169
REGION : 005

John Reilly CE Ltd
Southern Division
Barley House
Duncan Road, Parkgate
Southampton, Hampshire
SO31 1ZT

DELIVERED TO :
S122, C/O PERSIMMON HOMES
THAMES VALLEY, LOOSE LANE
Sompting
LANCING West Sussex , BN15 0GN

ITEM CODE	DESCRIPTION OF GOODS	QUANTITY PER	PRICE PER	VALUE £	VAT %
877957	POLYPIPE POLYSTORM CELL ASSEMBLY 61T RECYCLED MAT PSM1A 1000MMX500MMX400MM	390.00 EACH	EACH		20.00

POLYPIPE CIVILS Date:13/05/24
Del Nt:10018202
Branch :
SE & SOUTH REGIONAL OFFICE DIR
KEYLINE CIVILS SPECIALIST LTD
RANKINE ROAD
DANESHILL WEST IND EST
BASINGSTOKE
RG24 8SH
01256 682147

GOODS AMOUNT	
VAT TOTAL	)
INVOICE TOTAL	

TERMS NET MONTHLY

Health & Safety: For information on products (e.g. COSHH) please visit www.keyline.co.uk. Contact the H&S Dept. during office hours on (01604) 752424 if data not available.

Pay your account balance online at:
www.keyline.co.uk

Registered in Scotland No. 42425. Registered Office : 50 Mauchline Street, Glasgow, G5 8HQ

527084

Keyline
CIVILS SPECIALIST

Keyline Civils Specialist Limited
VAT Registration Number : GB 408 5567 37
Cheques Payable to : Keyline Civils Specialist Ltd.
50 MAUCHLINE STREET
GLASGOW , G5 8HQ

INVOICE 6848 AAM850

INVOICE/TAX DATE : 15/05/24
DELIVERY NOTE : G01372
DELIVERY DATE : 15/05/24
ORDER NO. : S122/370539
ACCOUNT NO : 615169
REGION : 005

JOHN REILLY C. E. LTD
20 MAY 2024

John Reilly CE Ltd
Southern Division
Barley House
Duncan Road, Parkgate
Southampton, Hampshire
SO31 1ZT

DELIVERED TO :
S122, C/O PERSIMMON HOMES
THAMES VALLEY, LOOSE LANE
Sompting
LANCING West Sussex , BN15 0GN

ITEM CODE	DESCRIPTION OF GOODS	QUANTITY PER	PRICE PER	VALUE £	VAT %
877957	POLYPIPE POLYSTORM CELL ASSEMBLY 61T RECYCLED MAT PSM1A 1000MMX500MMX400MM	390.00 EACH	5 EACH		20.00

POLYPIPE CIVILS Date:15/05/24
Del Nt:10025501
Branch :
SE & SOUTH REGIONAL OFFICE DIR
KEYLINE CIVILS SPECIALIST LTD
RANKINE ROAD
DANESHILL WEST IND EST
BASINGSTOKE
RG24 8SH
01256 682147

GOODS AMOUNT	
VAT TOTAL	
INVOICE TOTAL	

TERMS NET MONTHLY

Health & Safety: For information on products (e.g. COSHH) please visit www.keyline.co.uk. Contact the H&S Dept. during office hours on (01604) 752424 if data not available.

Pay your account balance online at:
www.keyline.co.uk

527256

Keyline
CIVILS SPECIALIST

:eyline Civils Specialist Limited
'AT Registration Number : GB 408 5567 37
:heques Payable to : Keyline Civils Specialist Ltd.
0 MAUCHLINE STREET

3LASGOW , G5 8HQ

INVOICE 6848 AAM879

INVOICE/TAX DATE : 17/05/24
DELIVERY NOTE : G01373
DELIVERY DATE : 17/05/24
ORDER NO. : S122/370539
ACCOUNT NO : 615169
REGION : 005

Iohn Reilly CE Ltd
Southern Division
Barley House
Duncan Road, Parkgate
Southampton, Hampshire
SO31 1ZT

DELIVERED TO :
S122, C/O PERSIMMON HOMES
THAMES VALLEY, LOOSE LANE
Sompting
LANCING West Sussex , BN15 0GN

ITEM CODE	DESCRIPTION OF GOODS	QUANTITY PER	PRICE PER	VALUE £	VAT %
877957	POLYPIPE POLYSTORM CELL ASSEMBLY 61T RECYCLED MAT PSM1A 1000MMX500MMX400MM	390.00 EACH	EACH		20.00

POLYPIPE CIVILS Date:17/05/24
Del Nt:10029051
Branch :
SE & SOUTH REGIONAL OFFICE DIR
KEYLINE CIVILS SPECIALIST LTD
RANKINE ROAD
DANESHILL WEST IND EST
BASINGSTOKE
RG24 8SH
01256 682147

GOODS AMOUNT	
VAT TOTAL	
INVOICE TOTAL	

TERMS NET MONTHLY

Health & Safety: For information on products (e.g. COSHH) please visit www.keyline.co.uk. Contact the H&S Dept. during office hours on (01604) 752424 if data not available.

Pay your account balance online at:
www.keyline.co.uk

JOHN REILLY C. E. LTD
22 MAY 2024

527311

Keyline
CIVILS SPECIALIST

INVOICE 6848 AAM898

eyline Civils Specialist Limited
AT Registration Number : GB 408 5567 37
heques Payable to : Keyline Civils Specialist Ltd.
) MAUCHLINE STREET
LASGOW , G5 8HQ

JOHN REILLY C. E. LTD
23 MAY 2024

INVOICE/TAX DATE : 20/05/24
DELIVERY NOTE : G01374
DELIVERY DATE : 20/05/24
ORDER NO. : S122/370539
ACCOUNT NO : 615169
REGION : 005

ohn Reilly CE Ltd
outhern Division
arley House
uncan Road, Parkgate
outhampton, Hampshire
O31 1ZT

DELIVERED TO :
S122, C/O PERSIMMON HOMES
THAMES VALLEY, LOOSE LANE
Sompting
LANCING West Sussex , BN15 0GN

ITEM CODE	DESCRIPTION OF GOODS	QUANTITY PER	PRICE PER	VALUE £	VAT %
877957	POLYPIPE POLYSTORM CELL ASSEMBLY 61T RECYCLED MAT PSM1A 1000MMX500MMX400MM	390.00 EACH	EACH		20.00

POLYPIPE CIVILS Date:20/05/24
Del Nt:10030169
Branch :
SE & SOUTH REGIONAL OFFICE DIR
KEYLINE CIVILS SPECIALIST LTD
RANKINE ROAD
DANESHILL WEST IND EST
BASINGSTOKE
RG24 8SH
01256 682147

GOODS AMOUNT	
VAT TOTAL	
INVOICE TOTAL	

TERMS NET MONTHLY

Health & Safety: For information on products (e.g. COSHH) please visit www.keyline.co.uk. Contact the H&S Dept. during office hours on (01604) 752424 if data not available.

Pay your account balance online at:
www.keyline.co.uk

527305

Keyline
CIVILS SPECIALIST

JOHN REILLY C. E. LTD
28 MAY 2024

INVOICE 6848 AAM947

eyline Civils Specialist Limited
AT Registration Number : GB 408 5567 37
heques Payable to : Keyline Civils Specialist Ltd.
) MAUCHLINE STREET

:LASGOW , G5 8HQ

ohn Reilly CE Ltd
Southern Division
Barley House
)uncan Road, Parkgate
Southampton, Hampshire
SO31 1ZT

INVOICE/TAX DATE : 22/05/24
DELIVERY NOTE : G01375
DELIVERY DATE : 22/05/24
ORDER NO. : S122/370539
ACCOUNT NO : 615169
REGION : 005

DELIVERED TO :
S122, C/O PERSIMMON HOMES
THAMES VALLEY, LOOSE LANE
Sompting
LANCING West Sussex , BN15 0GN

ITEM CODE	DESCRIPTION OF GOODS	QUANTITY PER	PRICE PER	VALUE £	VAT %
877957	POLYPIPE POLYSTORM CELL ASSEMBLY 61T RECYCLED MAT PSM1A 1000MMX500MMX400MM	390.00 EACH	: EACH		20.00

POLYPIPE CIVILS Date:22/05/24
Del Nt:10034135
Branch :
SE & SOUTH REGIONAL OFFICE DIR
KEYLINE CIVILS SPECIALIST LTD
RANKINE ROAD
DANESHILL WEST IND EST
BASINGSTOKE
RG24 8SH
01256 682147

GOODS AMOUNT	
VAT TOTAL	
INVOICE TOTAL	

TERMS NET MONTHLY

Health & Safety: For information on products (e.g. COSHH) please visit www.keyline.co.uk. Contact the H&S Dept. during office hours on (01604) 752424 if data not available.

Pay your account balance online at:
www.keyline.co.uk

527495

Polystorm-R Modular Cell

Data Sheet

PRODUCT INFORMATION **P1** **ISSUE 4 - SEPT 2017**

Product code: PSM1A

The Polystorm-R modular cell is ideally suited for loaded applications at greater depths, such as housing, commercial and infrastructure projects and has a compressive strength of up to 61 tonnes/m². It offers all the proven performance of the Polystorm cell, with the added benefits of being manufactured from over 90% recycled material content.

Wherever performance criteria and standards allow, we will always maximise the sustainability of our products by using post consumer plastics in their manufacture. By sourcing and carefully controlling the quality of the recycled material we use our precision injection moulding. Therefore we are able to guarantee consistent quality in our recycled plastic, giving you the confidence and the performance levels you expect from the market leader.

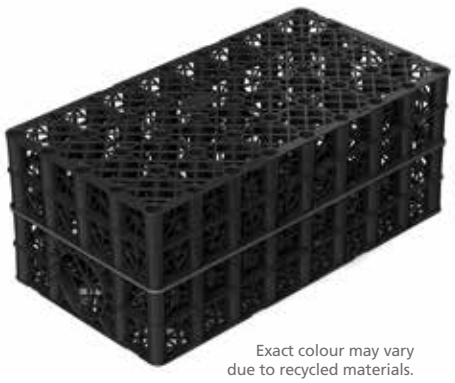

Exact colour may vary due to recycled materials.

Key Benefits

- Made from specially selected and controlled recycled materials
- Environmentally friendly, sustainable solution
- Has undergone stringent testing to ensure product performance
- Compressive strength of 61 tonnes/m²
- Ideal for retention, attenuation and infiltration applications with a suitable geomembrane or geotextile
- BBA approved
- Allow flexibility of shape - ideal for shallow excavation systems, narrow strips or use in restricted areas
- Can be used as part of a value engineered hybrid system with Polystorm, Polystorm Lite and Polystorm Xtra
- Integrated inlet and outlet
- 3D flow throughout the structure
- 95% void ratio
- Light weight yet robust - excellent Health and Safety and installation benefits
- 60 years creep limited life expectancy

Technical Support

Detailed guidance and assistance is available.
For further information, please contact our Technical Team on **+44 (0) 1509 615100** or email **civils@polypipe.com**

BBA BRITISH BOARD OF AGREMENT
CERTIFICATE No. 06/4297

ELEMENT	VALUE
PHYSICAL PROPERTIES	
Length	1m
Width	0.5m
Depth	0.4m
Total volume	0.2m³
Unit weight	9kg (approx)
Unit storage volume	0.19m³ (190 litres)
Void ratio	95%
SHORT TERM COMPRESSIVE STRENGTH	
Vertical	610 kN/m² **
Lateral	63 kN/m² **
SHORT TERM DEFLECTION	
Short-term vertical deflection	60 kN/m² per mm
LONG TERM DEFLECTION	
Estimated long term vertical deflection (creep)	0.2798 Ln (design life in hrs) +0.485 [Based on an applied test load = 162 kN/m²] Creep data limit 60 years
Estimated long term lateral deflection (creep)	1.0192 Ln (design life in hrs) -3.864 [Based on an applied test load = 30.8 kN/m²] Creep data limit 60 years

Note: Polystorm-R is ideal for use in trafficked and pedestrian applications subject to a structural design check and suitable installation conditions

* Each unit includes 4 Clips and 2 Shear Connectors.

** Compressive strength at yield, maximum recommended value for design purposes.

Polypipe Civils
Charnwood Business Park, Loughborough, Leicestershire LE11 1LE
Tel: +44 (0) 1509 615100 Fax: +44 (0) 1509 610215 Email: civils@polypipe.com
www.polypipe.com/wms

Polypipe

Polystorm-R Modular Cell

Data Sheet

RECOMMENDED MAXIMUM DEPTH OF INSTALLATION (to cell invert) [m]

TYPICAL SOIL TYPE	TYPICAL ANGLE OF SHEAR RESISTANCE	SOIL WEIGHT kN/m³	WITHOUT GROUNDWATER (below base of cells) NORMAL CASE		WITH GROUNDWATER AT 1M BELOW GROUND LEVEL AND UNITS WRAPPED IN GEOMEMBRANE	
			Pedestrian	Trafficked (cars) <3000kg GVW	Pedestrian	Trafficked (cars) <3000kg GVW
Stiff over consolidated clay e.g. London clay	24	20.0	2.2	1.9	1.8	1.6
Normally consolidated silty sandy clay e.g. alluvium, made ground	26	19.0	2.4	2.2	1.9	1.7
Loose sand and gravel	30	18.0	3.0	2.7	2.0	1.9
Medium dense sand and gravel	33	19.0	3.2	2.9	2.0	1.9
Dense sand and gravel	38	20.0	3.7	3.5	2.1	2.0

Note:
1) Stated depths based on the calculation methodology detailed within CIRIA C680 (2008)
2) Assuming water density = 10.0kN/m³
3) Assumed ultimate limit state (ULS) partial factor of safety applied to: Material = 2.75 Lateral pressure = 1.35

Durability

The polymer material used in the manufacture of the Polystorm-R unit has an adequate resistance to attack from the type and quantities of chemicals that may be expected to naturally occur in uncontaminated soils and rainwater runoff. When installed in accordance with our recommendations, it is expected that the Polystorm-R unit will have a design life in excess of 60 years*. The installer of a proposed geocellular structure should ensure that an appropriate design check has been undertaken, in accordance with the recommended methodology and factors of safety given in CIRIA C680 (2008), Structural Design of Modular Geocellular Drainage Tanks, prior to the commencement of construction activities.

* Derived from long term extrapolated creep testing

Notes

1. Unless stated, all values are nominal and may vary within normal production tolerances.
2. The characteristic unit parameters stated have been based on Polypipe BBA certificate N° 06/4297, sheet 3.
3. Polypipe reserve the right to change product specifications without prior notice.
4. This document is uncontrolled and updates will not be issued automatically.

RECOMMENDED MINIMUM COVER LEVELS [m]

LIVE LOAD CONDITIONS	PEDESTRIAN	LIGHT TRAFFICKED	
		Car park with vehicle mass <GVW	
Minimum cover depth required (m)	0.50	<3000kg 0.50	<9000kg 0.65

Note
1) Stated depths based on the calculation methodology detailed within CIRIA C680 (2008)
2) Assumed serviceability limit state (SLS) partial factor of safety applied to: Material = 1.5 Live load = 1.0 Dead load = 1.0
3) Shallower minimum burial depths may be applicable subject to an assessment of the specific site conditions. For further details please consult our Technical Team on 01509 615100.

All descriptions and illustrations in this publication are intended for guidance only and shall not constitute a 'sale by description'. All dimensions given are nominal and Polypipe may modify and change the information, products and specifications from time to time for a variety of reasons, without prior notice. The information in this publication is provided 'as is' on September 2017. Updates will not be issued automatically. This information is not intended to have any legal effect, whether by way of advice, representation or warranty (express or implied). We accept no liability whatsoever (to the extent permitted by law) if you place any reliance on this publication you must do so at your own risk. All rights reserved. Copyright in this publication belongs to Polypipe and all such copyright may not be used, sold, copied or reproduced in whole or part in any manner in any media to any person without prior consent. Polypipe is a registered trademark of Polypipe. All Polypipe products are protected by Design Right under CDPA 1988. Copyright © 2016 Polypipe. All rights reserved.

Polypipe Civils
Charnwood Business Park, Loughborough, Leicestershire LE11 1LE
Tel: +44 (0) 1509 615100 Fax: +44 (0) 1509 610215 Email: civils@polypipe.com
www.polypipe.com/wms

Polypipe

APPENDIX G

SURFACE WATER DRAINAGE DESIGN CHECKS

AGAINST AS-BUILT INFORMATION.

MALTHOUSE MEADOWS PHASE 1, WEST SOMPTING

ADOPTABLE SURFACE WATER DRAINAGE: COMPARISON BETWEEN DESIGN AND AS-BUILT

MANHOLE REF.	DESIGN COVER LEVEL	DESIGN INVERT LEVEL	DESIGN DOWNSTREAM PIPE SIZE	DESIGN DOWNSTREAM PIPE REF.	DESIGN DOWNSTREAM PIPE GRADIENT	PIPE LENGTH	AS-BUILT INVERT LEVEL	DIFFERENCE BETWEEN DESIGN AND AS-BUILT INVERT LEVELS	AS-BUILT EASTING (m)	AS-BUILT NORTHING (m)	AS-BUILT DOWNSTREAM PIPE LENGTH (m)	AS-BUILT PIPE GRADIENT	AS-BUILT PIPE VELOCITY (m/s)
1/01	8.475	7.125	225	1.000	169.9	19.7	7.125	0.000	516,503.353	104,744.174	19.885	172.9	0.99
1/02	8.360	7.009	225	1.001	170.0	22.5	7.010	0.001	516,483.484	104,743.377	22.466	109.1	1.25
1/03	8.150	6.877	300	1.002	161.0	44.9	6.804	-0.073	516,461.227	104,746.432	45.060	259.0	0.97
1/04	8.540	6.523	300	1.003	170.0	9.3	6.630	0.107	516,469.307	104,790.762	9.552	183.7	1.16
1/05	8.518	6.468	300	1.004	170.0	9.3	6.578	0.110	516,466.000	104,799.723	9.537	221.8	1.05
1/06	8.435	6.411	300	1.005	170.0	22.9	6.535	0.124	516,457.669	104,804.366	22.983	148.3	1.29
1/07	8.090	6.276	300	1.006	170.0	23.4	6.380	0.104	516,434.788	104,806.524	23.674	148.0	1.29
1/08	8.145	6.695	225	2.000	150.0	31.9	6.693	-0.002	516,416.314	104,841.627	32.255	68.2	1.59
1/09	7.850	6.138	300	1.007	84.8	10.6	6.220	0.082	516,411.336	104,809.758	10.319	100.2	1.57
1/10	7.735	6.013	300	1.008	200.0	25.5	6.117	0.104	516,401.142	104,808.159	25.753	265.5	0.96
1/11	7.450	5.886	300	1.009	200.0	23.7	6.020	0.134	516,375.661	104,811.891	23.353	140.7	1.32
1/12	7.240	5.768	300				5.854	0.086	516,353.064	104,817.784	3.905	31.2	2.83
DD 4/01A	7.350	5.745	300	1.010	170.0	8.9	5.729	-0.016	516,350.021	104,820.231	4.398	191.2	1.13
1/13	7.015	5.716	300	1.011	203.3	2.0	5.706	-0.010	516,346.707	104,823.122			
1/14	6.900	5.400	300				5.392	-0.008					
2/01	9.430	8.040	225	1.000	83.1	21.6	8.032	-0.008	516,442.078	104,949.653	21.608	84.7	1.42
2/02	9.230	7.780	225	1.001	139.7	29.3	7.777	-0.003	516,434.822	104,929.300	29.300	148.0	1.07
2/03	8.865	7.570	225	1.002	92.8	24.1	7.579	0.009	516,430.159	104,900.373	24.018	91.3	1.37
2/04	8.570	7.310	225	1.003	168.4	52.0	7.316	0.006	516,424.278	104,877.086	51.979	199.2	0.92
2/05	8.270	7.001	225				7.055	0.054	516,374.373	104,891.623	3.353	14.5	3.40
DD 2/01	8.425	6.823	225	1.004	168.5	20.9	6.823	0.000	516,371.154	104,892.561	18.087	188.4	0.95
2/06	8.100	6.877	225				6.727	-0.150	516,353.851	104,897.827			
2/07	8.360	6.600	225				6.410	-0.190					
3/01	10.305	8.855	225	1.000	136.9	58.9	8.840	-0.015	516,448.910	105,062.514	58.699	143.2	1.09
3/02	9.835	8.425	225	1.001	163.6	22.9	8.430	0.005	516,434.388	105,005.640	23.054	147.8	1.07
3/03	9.765	8.285	225	1.002	82.0	41.0	8.274	-0.011	516,432.525	104,982.661	41.082	69.7	1.57
3/04	9.110	7.685	225				7.685	0.000	516,391.481	104,980.885	2.705	17.7	3.10
DD 3/01	9.235	7.669	225	1.003	170.0	18.5	7.532	-0.137	516,388.782	104,980.709	15.386	172.9	0.99
3/05	8.700	7.576	225	1.004			7.443	-0.133	516,373.400	104,980.357			
3/06	8.700	7.150	225				7.122	-0.028					
4/01	10.120	9.080	225	1.000	83.3	60.6	9.078	-0.002	516,433.853	105,079.834	60.237	112.0	1.23
4/02	9.550	8.562	225	2.000	169.2	35.5	8.540	-0.022	516,371.461	105,120.855	35.368	185.2	0.96
4/03	9.500	8.532	225				8.349	-0.183	516,373.890	105,085.571	2.862	238.5	0.84
DD 4/01	9.500	8.337	225	1.001	170.0	10.6	8.337	0.000	516,371.036	105,085.790	8.494	139.2	1.11
4/04	9.430	8.290	225	1.002			8.276	-0.014	516,362.578	105,086.569			
4/05	9.430	7.800	225				7.804	0.004					