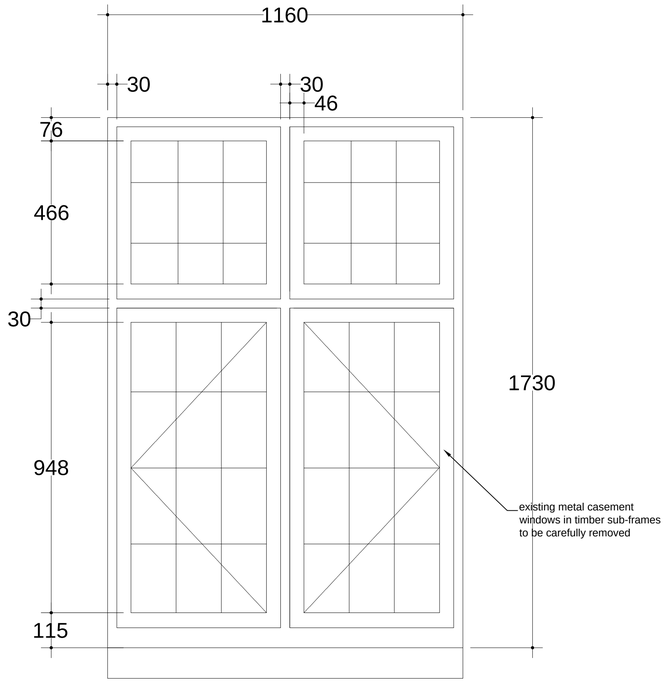

Typical Window to Bar Area
Ref: GF.01
(existing)
scale1:10 @ A1

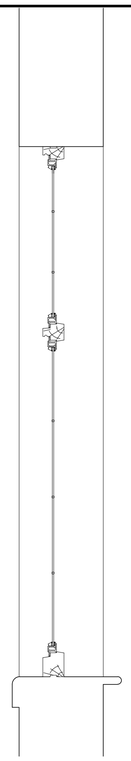

Typical Window Section
(existing)
scale1:10 @ A1

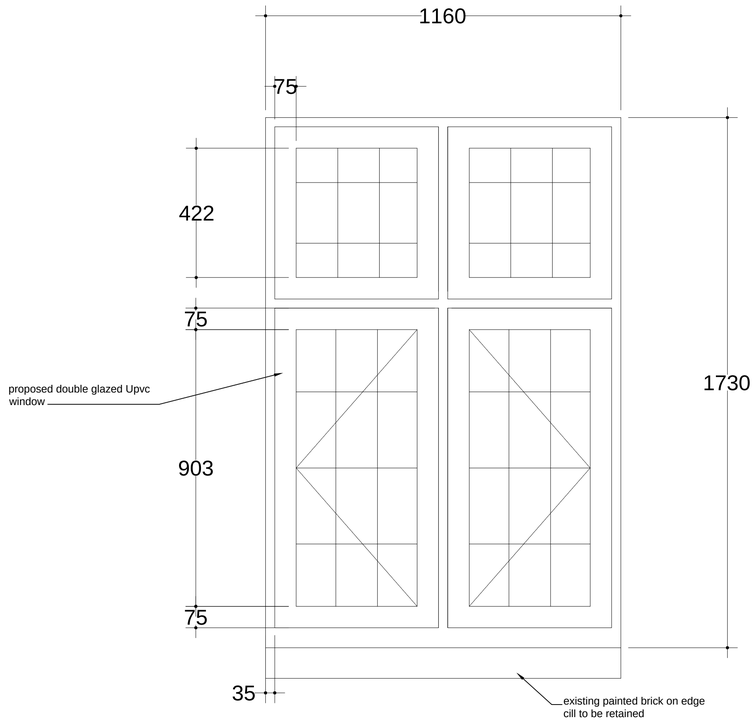

Typical Window to Bar Area
Ref: GF.01
(proposed)
scale1:10 @ A1

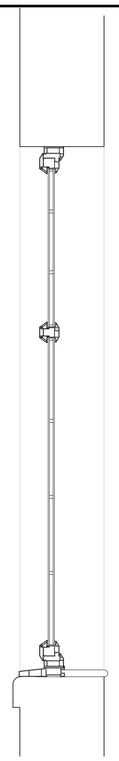

Typical Window Section
(proposed)
scale1:10 @ A1

0 200 400 600 800 1000mm

1:10

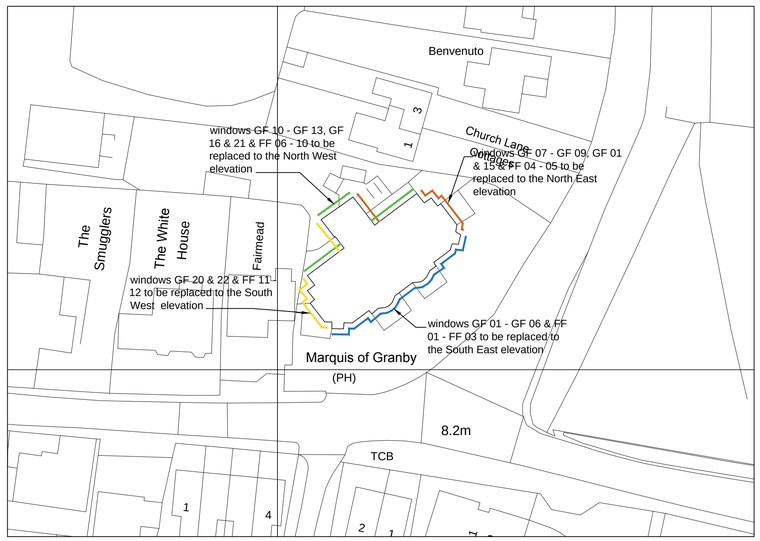

Block Plan
scale1:500 @ A1

0 10 20 30 40 50 60 70 80 90 100

1 : 500

Copyright This drawing is the property of Maylands Consulting. Its copyright and design content is reserved by them and the drawing is issued on the condition that it is not copied, reproduced, retained or disclosed to any other unauthorised person, either wholly or in part without the consent in writing of Maylands Consulting. Do not scale this drawing.

Verify all dimensions on site before commencing any work or preparing any shop drawings. All dimensions are in mm unless otherwise stated. Report any alterations or omissions to the Architect. This drawing incorporates information from other professions. Maylands Consulting cannot accept responsibility for the integrity or accuracy of such information. Any clarification and/or additions that are required appertaining to such information should be sought from the relevant party or their appointed representative.

Rev	Details	Name	Date
.	.	.	.

RICS the mark of property professionalism worldwide

Maylands Consulting

SURVEYING
ARCHITECTURAL DESIGN
PROJECT MANAGEMENT



Milroy House
Sayers Lane
Tenterden
Kent TN30 6BW
Tel: 01580 761722
Fax: 01580 761378
email: mail@maylandsconsulting.co.uk
www.maylandsconsulting.co.uk
Regulated by RICS

Client
Punch Taverns

Project
Replacement Window Scheme
The Marquis PH
West Street
Sompting, Lancing. BN15 0AP

Drawing Name
Window Detail & Block Plan

north

Status
Planning

Scale	Date
1:5 1:500	Dec 2015
Drawn By: R.F	Checked By:

Job Number
MC15079

Drawing No	Revision
003	