ADUR DISTRICT COUNCIL

TOWN AND COUNTRY PLANNING ACT 1990

APPLICATION FOR PLANNING PERMISSION

4 copies of this form required, together with plans and appropriate fee.

FOR OFFICIAL USE ONLY
App. No A/0631/07
Date Received 10 JUL 2007
Fee 135

IT IS IMPORTANT THAT YOU READ THE GUIDANCE NOTES AS INCORRECT COMPLETION INVOLVES DELAY

1. Applicant (in BLOCK CAPITALS)	Agent (if any) to whom correspondence should be sent (in BLOCK CAPITALS)
Name MR. C. J. PHILLIPS	Name MR. T. SHUREY
Address 120 ABBEY ROAD, LANCING, BN15 0AD	Address 30 WEMBLEY AVENUE, LANCING, BN15 9JZ
Tel. No. [redacted]	Tel. No. 01903 764996

2. Type of Application (see Note 2)

	State Yes or No
(a) Full planning permission (including changes of use)	YES
(b) Outline planning permission	NO →
(c) Renewal of a temporary permission	NO
(d) Permission for retention of building or continuance of use without complying with a condition imposed on a planning permission	NO →
(e) Permission to develop land without complying with a condition imposed on a planning permission.	NO

If yes, state those matters to which this application relates (tick where appropriate)

- (i) Siting ☐
- (ii) Design ☐
- (iii) External appearance ☐
- (iv) The means of access ☐
- (v) Landscaping of the site ☐

If yes, state the date and number of the permission and outline the particular condition

Date

Application No.

Condition No.

3. (a) Full address or location of the land to which this application relates

SITE TO REAR OF 31 RIVERSIDE ROAD, SHOREHAM-BY-SEA, BN43 5RB

(b) State whether applicant owns or controls any adjoining land — State Yes or No: NO — If yes, this land must be edged blue on the location plan

(c) Area of site 4800 ~~hectares~~/sq. metres

Dimensions of the application site and distances from new buildings to boundaries must be clearly indicated on plans

(d) Description of proposed development (If residential development, state no. of units proposed and type if known e.g. houses, bungalows, flats)	PROPOSED ADDITIONAL BERTHS/ WET & DRY MOORINGS.

(e) State whether the proposal involves:-

	State Yes or No		State Yes or No
(i) New building(s) or structure(s)	YES	(iv) Alteration of an an existing) vehicular access to a highway)pedestrian	YES / NO
(ii) Alteration or extension of building(s)	NO		
(iii) Construction of a new) vehicular access to a highway) pedestrian	NO / NO	(v) Closure of existing access	NO
		(vi) Change of use only	NO

4. Particulars of Use of Buildings or Land: state (a) Present use BOAT MOORINGS.
(b) If vacant, the last use

5. **Additional Information**

		State Yes or No		State Yes or No
(a)	Is the application for industrial, office, warehousing, storage, shopping, commercial purposes or places of public assembly? (See note 5)	No	If yes, complete part 2 of form C.P. 1.	
(b)	Is the application for the winning or working of minerals?	No	If yes, complete part 4 of form C.P. 1	
(c)	Is the application for an agricultural dwelling or building?	No	If yes, complete part 6 of form C.P. 1	
(d)	Does the proposed development involve the demolition of any residential units?	No	If yes, how many units? Please indicate their positions on plans	
(e)	Does the proposed development involve the felling of any trees?	No	If yes, indicate their position on plans.	
(f)	Does the proposed development involve any public right of way within the site?	No	If yes, indicate the position on plan.	
(g)	Does the proposed development involve demolition or alteration of a building or Special Architectural or Historic interest or demolition within a Conservation Area?	No	If YES a separate application for **Listed Building Consent or Conservation Area Consent** may be necessary.	

(h) (i) How will surface water be disposed of? (i) N.A.
(ii) How will foul sewage be disposed of? (e.g. mains, cesspit, etc.) (ii) N.A.

6. **Plans** (See Note 6). List of drawings and plans submitted as part of the application — indicate drawing numbers and scales. 4 sets of all drawings are required. Additional copies in respect of major applications will assist in determination of such applications.

982/2/01c SITE PLAN - 1:250

7. **Fees** (See Note 7)
If a fee is submitted please give the amount £ 135.00

8. I/WE APPLY FOR PLANNING PERMISSION AS DETAILED ABOVE.
DATE 16.5.07 SIGNED [redacted]
on behalf of MR. C.J. PHILLIPS
(insert applicant's name if signed by an agent

9. **Certificate under Section** 66 of the Town and Country Planning Act, 1990

N.B. A signed certificate MUST accompany this application (See Note 9).

If the applicant is the sole owner (a) the following certificate should be completed and signed.

CERTIFICATE A 1. **Certificate A(a)**

I certify that:-

(a) 'Owner means a person having a freehold interest or a tenancy the unexpired term of which was not less than 7 years

on the day 21 days before the date of the accompanying application nobody, except the applicant, was the owner (a) of any part of the land to which the application relates.

*2. None of the land to which the application relates is or is part of an agricultural holding.

OR

*3. * I have / The applicant has ____ given requisite notice to every person other than *myself / himself/herself who, on the day 21 days before the date of the application was a tenant of an agricultural holding on all or part of the land to which the application relates, as follows

Name of Tenant	Address at which Notice was served	Date on which Notice was served

*Delete where inappropriate

Signed.....

On behalf of.....

Date.....

ADUR DISTRICT COUNCIL

Town and Country Planning (General Development Procedure) Order 1995

CERTIFICATE UNDER ARTICLE 7

Certificate B *(a)*
I certify that:

• I have/~~The applicant has/The appellant has~~* given the requisite notice to everyone else who, on the day 21 days before the date of the accompanying application/appeal*, was the owner*(b)* of any part of the land to which the application/appeal* relates, as listed below.

Owner's*(b)* name	Address at which notice was served	Date on which notice was served
MR. J. PARTRIDGE	MONTECUM FISH MARKET BRIGHTON ROAD SHOREHAM-BY-SEA	16-5-07

• None of the land to which the application/appeal relates is, or is part of, an agricultural holding.

OR

• I have/The applicant has/The appellant has given the requisite notice to every person other than my/him/her* self who, on the day 21 days before the date of the application/appeal*, was a tenant of an agricultural holding on all or part of the land to which the application/appeal* relates, as follows:

Tenant's name	Address at which notice was served	Date on which notice was served

ADUR DISTRICT COUNCIL
PLANNING DIVISION
PLAN No. A/sc/07/0167
DATE RECEIVED 10 JUL 2007

Signed [redacted]

* On behalf of MR. C. J. PARTRIDGE

Date 16-5-07

*delete where inappropriate

(a) This Certificate is for use with applications and appeals for planning permission (articles 7 and 9(1) of the Order). One of Certificates A, B, C or D (or the appropriate certificate in the case of certain minerals applications) must be completed, together with the Agricultural Holdings Certificate.

(b) "owner" means a person having a freehold interest or a leasehold interest the unexpired term of which is not less than 7 years, or, in the case of development consisting of the winning and working of minerals, a person entitled to an interest in a mineral in the land (other than oil, gas, coal, gold or silver).

ADUR DISTRICT COUNCIL

NOTICE NO. 1

Town and Country Planning (General Development Procedure) Order 1995

NOTICE UNDER ARTICLE 6 OF APPLICATION FOR PLANNING PERMISSION

(to be published in a newspaper or to be served on an owner or a tenant**)*

Proposed development at *(a)*...SITE TO REAR OF 31 RIVERSIDE ROAD, BN43 5RB...

I give notice that *(b)*...MR. C. J. PHILLIPS...

is applying to the ADUR DISTRICT COUNCIL

for planning permission to *(c)*...CONSTRUCT ADDITIONAL PONTOONS...

Anyone owner* of the land or tenant** who wishes to make representations about this application should write to the Council at Development Services Dept. Civic Centre, Ham Road, Shoreham-by-Sea, West Sussex. BN43 6PR

by*(d)*...6-6-07...

* "owner" means a person having a freehold interest or a leasehold interest the unexpired term of which is not less than 7 years, or, in the case of development consisting of the winning or working of minerals, a person entitled to an interest in a mineral in the land (other than oil, gas, coal, gold or silver).

** "tenant" means a tenant of an agricultural holding any part of which is comprised in the land.

ADUR DISTRICT COUNCIL
PLANNING DIVISION
PLAN No. Adc631067
DATE RECEIVED 0 JUL 2007

Signed...[redacted]...

†On behalf of...MR. C. J. PHILLIPS...

Date...6-7-07...

Statement of owners' rights

The grant of planning permission does not affect owners' rights to retain or dispose of their property, unless there is some provision to the contrary in an agreement or in a lease.

Statement of agricultural tenants' rights

The grant of planning permission for non-agricultural development may affect agricultural tenants' security of tenure.

†delete where inappropriate

Insert:
(a) address or location of the proposed development
(b) applicant's name
(c) description of the proposed development
(d) date giving a period of 21 days beginning with the date of service, or 14 days beginning with the date of publication, of the notice (as the case maybe).

ADUR
DISTRICT COUNCIL

CHIEF EXECUTIVES DEPARTMENT
P. DAVIES
Head of Planning and Policy
Civic Centre, Ham Road, Shoreham-by-Sea.
West Sussex. BN43 6PR.
Telephone, Shoreham-by-Sea (01273) 263000
Fax No. (01273) 263027
E Mail. development.control@adur.gov.uk

Local Authority
BUILDING CONTROL

This copy has been produced specifically for
Map Return Scheme purposes only.
No further copies may be made.



ADUR DISTRICT COUNCIL
PLANNING DIVISION
PLAN No. A3C1031007
DATE RECEIVED 10 JUL 2007

This map is reproduced from Ordnance Survey material with the permission of Ordnance Survey on behalf of the Controller of Her Majestys Stationery Office. Crown Copyright. Unauthorised reproduction infringes Crown copyright and may lead to prosecution or civil proceedings.
Adur District Council. Licence Number 100018844. 08/12/2006

Scale 1:1250

REF: 982/2.1

DESIGN & ACCESS STATEMENT

FOR

ADDITIONAL BERTHS, WET AND DRY MOORINGS AT SITE TO REAR OF 31 RIVERSIDE ROAD. SHOREHAM-BY-SEA

MAY 2007
Revised June 2007

ADUR DISTRICT COUNCIL
PLANNING DIVISION
PLAN No. AD/0310/07
DATE RECEIVED 11 JUN 2007

- The purpose of the development is to provide additional wet and dry moorings/berths (23 wet total) to an established boat housing complex. The existing jetty already provides for 5 wet berths.
  Dry berths do not at present exist on this site. It is proposed to provide space for 10 wet berths.

- The wet moorings will comprise of both static and floating pontoons secured to anchored pile constructions and the dry moorings will be provided by the existing mud flats and concrete slipways.

- The gangways are to be metal lattice platforms and ramps.

- The proposed complex will provide wet berths for a variety of boat sizes ranging from 8-12M in length.

- Site access will be provided by the existing widened crossover on Riverside Road and will include a vehicle lay-by at the entrance to the site (6x4.5M total width).

- It is intended to provide parking on site for 8-10 vehicles. Further parking is available in the public car park situated within three minutes walk from this site.

- There exists an ongoing fishing business on this site which will necessitate the retained use of existing plant such as the essential employment of a fork lift truck for lifting heavy equipment in order to maintain the existing work environment. Existing HSE guidelines require the use of plant for moving all equipment in excess of 25KG's.
  It is intended that the use of existing plant requirements will be exercised within the confines of the existing jetty.

- Considerations will be given to all environment issues. In particular to the protection of wildlife and forma. It is intended to seek advice in order to put into action all necessary requirements to protect the existing conditions of the river bank and water way.

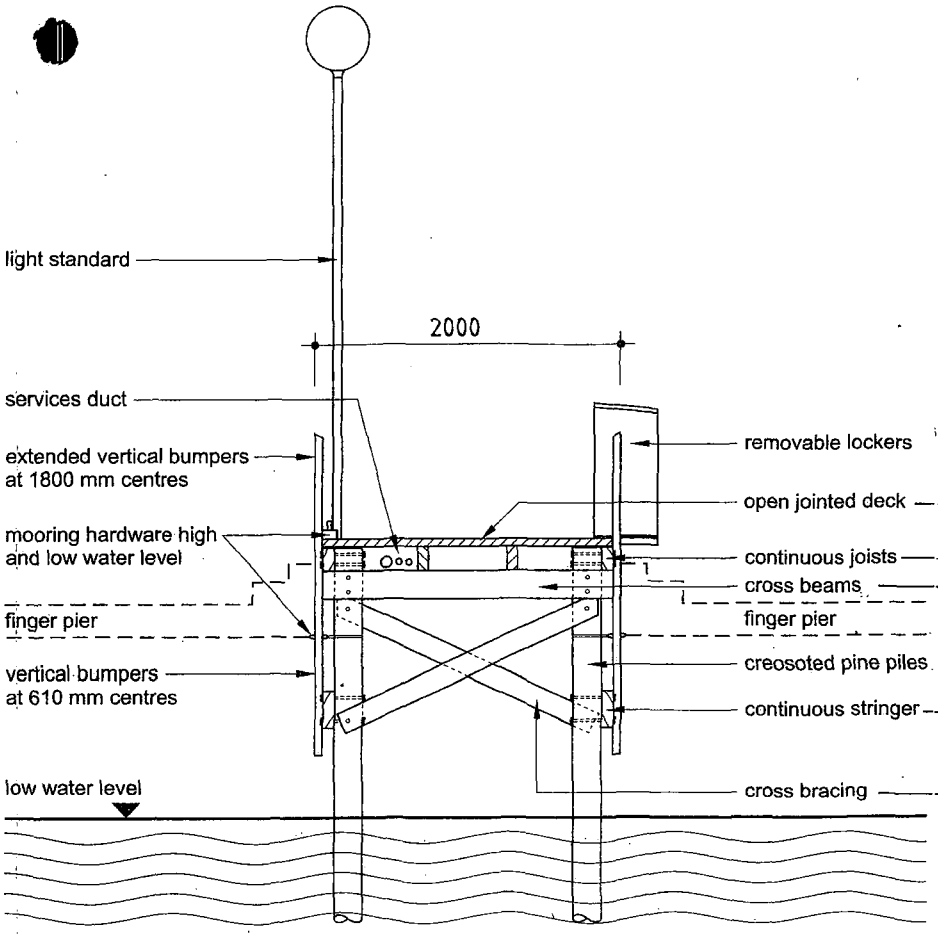

section through gangway

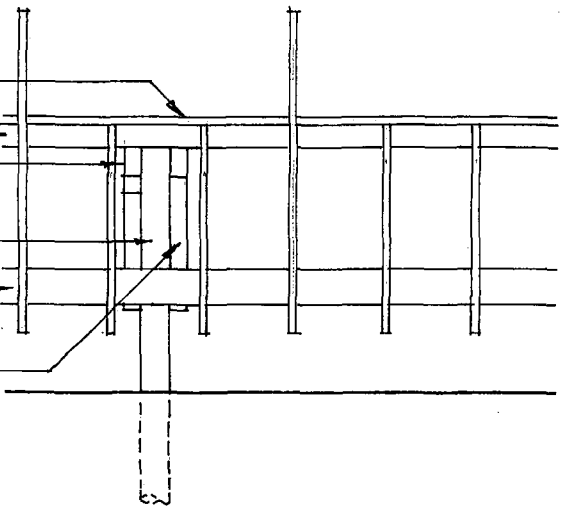

part elevation of gangway

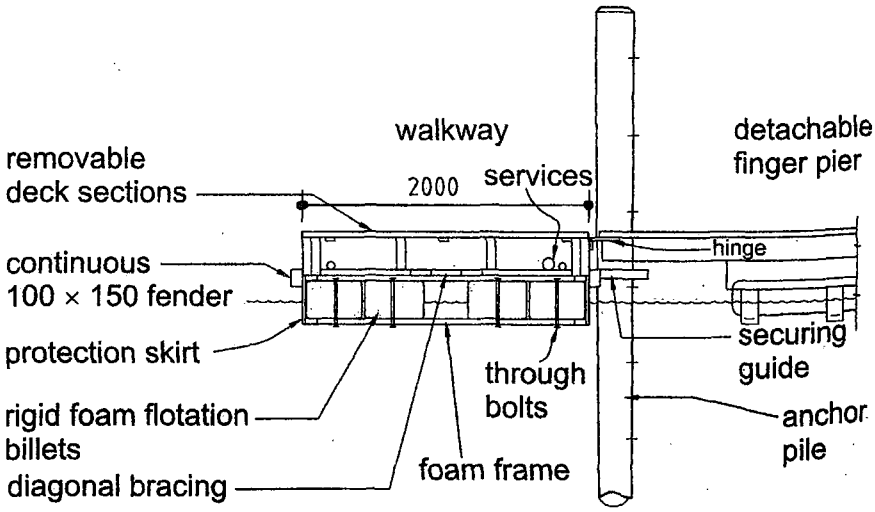

ADUR DISTRICT COUNCIL
PLANNING DIVISION
PLAN No. AD0316/07
DATE RECEIVED 10 JUL 2007

section through floating pontoon/walkway

Proposed Additional Berths' Wet and Dry Moorings at Site to rear of 31 Riverside Road, Shoreham-by-Sea.

scale = 1:50 date : July 2007

Details of Fixed and Floating Gangways/Walkways

Drawing No. 982/4/02



C - berths shown ..... 12.4.07.
B - pontoon layout amended ..... 24.3.07.
Revision A - ransom strip added ..... 5.3.07.

DATE RECEIVED
PLAN No.
ADUR DISTRICT COUNCIL
PLANNING DIVISION

Proposed Additional Berths, Wet and Dry Moorings at Site to rear of 31 Riverside Road, Shoreham-by-Sea.

Site Plan

scale = 1:250 date : Feb.2007

Drawing No. 982/2/01 c