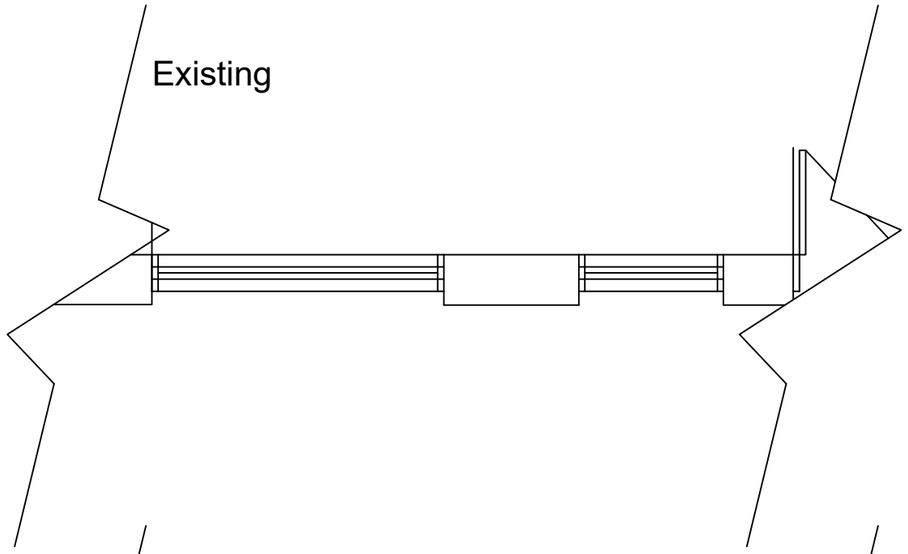

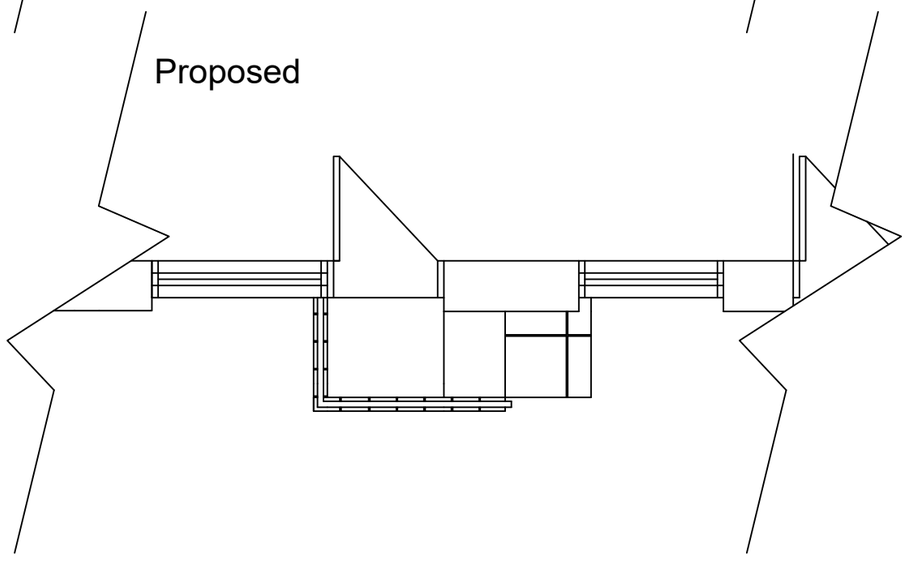



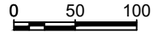

Ms Sarah Thompson
2 Arun Court
Stoney Lane
Shoreham
BN43 6LZ

Rear Platform & Step Drawing 2

Scale: 1:50
Date: Febuary 2025
Drawn: Stephanie McCarthy

ADUR & WORTHING HOME IMPROVEMENT ASSISTANCE
ADUR & WORTHING COUNCILS
PORTLAND HOUSE
RICHMOND ROAD
WORTHING
BN11 1HS