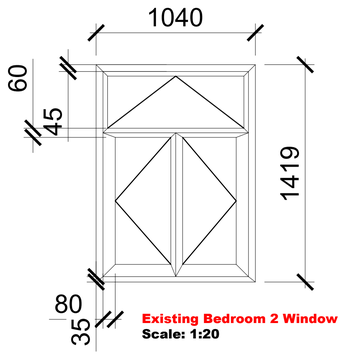

Existing Bedroom 2 Window
Scale: 1:20

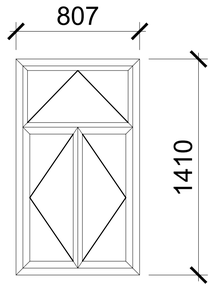

Existing Bedroom 3 Window
Scale: 1:20

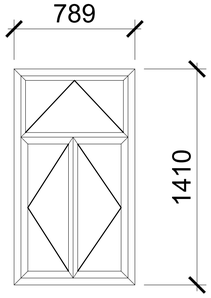

Existing Bathroom Window
Scale: 1:20

All existing Timber windows to be removed and replaced with UPVC windows by FENSA registered Contractor.

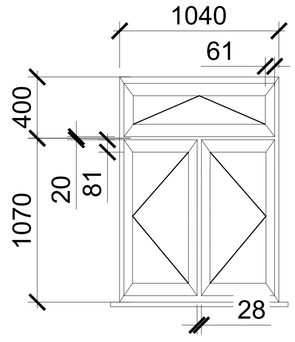

Proposed UPVC Bedroom 2 Window
Scale: 1:20

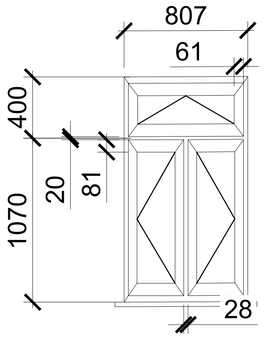

Proposed UPVC Bedroom 3 Window
Scale: 1:20

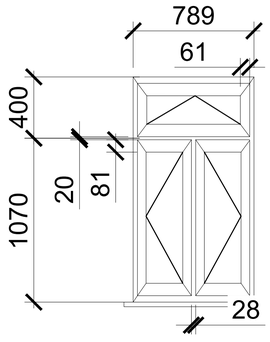

Proposed UPVC Bathroom Window
Scale: 1:20

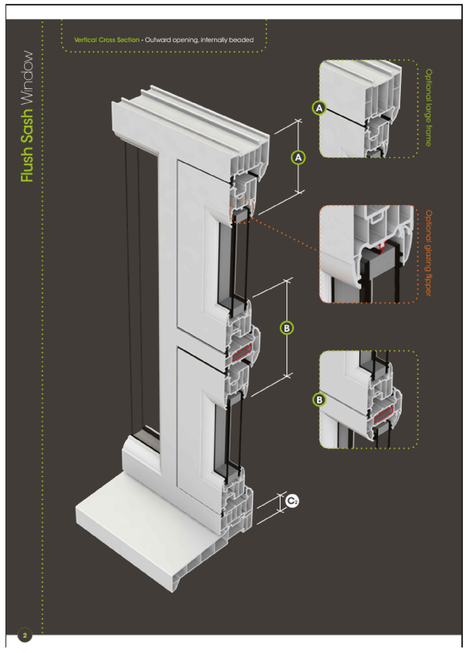

Liniar Flush Sash Windows Section (dimensions found on attached PDF)

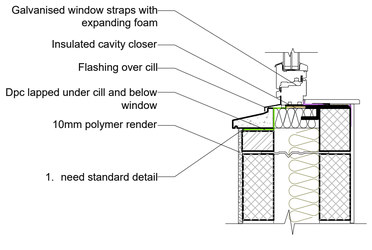

Maintain stone cill

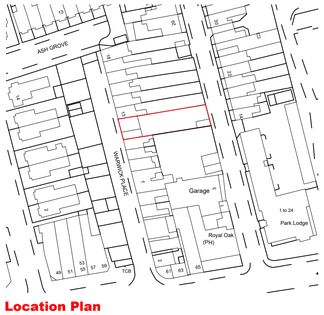

Location Plan
Scale: 1:1250

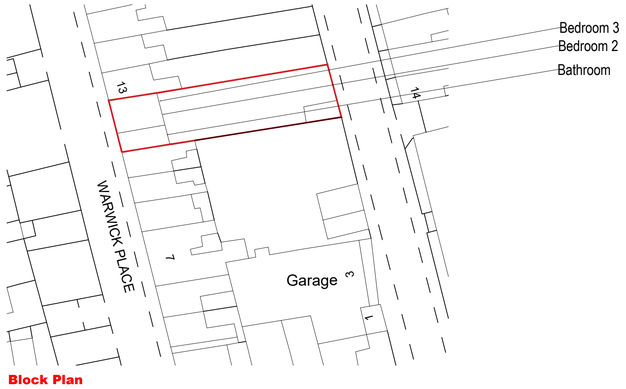

Block Plan
Scale: 1:500

SITE PHOTOS





Bedroom 2



Bedroom 3



Bathroom

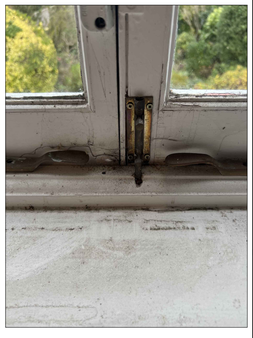

Example of wear



Example of wear



Locking/latch system

FOR APPROVAL

NOTE:

This drawing is to be read in conjunction with the Construction Notes and Structural Engineer's details.

The Contractor is responsible for all setting out and must check levels and dimensions on site before ordering materials or commencing work.

Refer to written dimensions only. Do not scale from drawings, except for the purposes of Planning assessment.

The Architect is to be immediately notified of any omissions or discrepancies.

Building work should not commence until all statutory approvals have been granted, i.e. Planning, Building Control, etc.

If a public sewer is discovered, consent to 'Build-over/Close-to' may be required from the Water Authority.

PARTY WALLS:

Work to Party Walls (including insertion of flashings, beam bearings, etc) are subject to Party Wall agreements with neighbours and are to be arranged by the Client in accordance with the Party Wall Act (i.e. Providing two months written notice)

Below ground drainage - Surface Water
Below ground drainage - Foul Water
Discharge pipes
Existing structure
Proposed structure
Removed structure
Section line

Revision	Date:	Details:	Initials:
B	06/01/2023	Planning Amendments	DLS
A	05/01/2023	Planning Amendments	DLS

These drawings and designs are the property of Shear Architectural Design Ltd and must not be copied, retained, or used without prior written consent. © Copyright

SHEAR ARCHITECTURAL
CREATE INSPIRE ENHANCE
Echo 3 Office, Maritime House,
Basin Road N,
Portslade, Brighton,
BN41 1WR
07881 656512
info@sheararchitecturaldesign.co.uk
www.sheararchitecturaldesign.co.uk

PROJECT:
12 Warwick Place,
Worthing,
West Sussex
BN11 3EU

DRAWING TITLE:
Replacement Windows

NORTH

DATE:	10/11/2023
SCALE:	Various @ A1
DRAWN:	ML
CHECKED:	DS
SHEET	1 OF 1

PROJECT NUMBER:	DRAWING NUMBER:	REVISION:
23/56	PL1	B

METERS @ 1:50 | METERS @ 1:100 | METERS @ 1:200 | METERS @ 1:500 | METERS @ 1:1250