Proposed

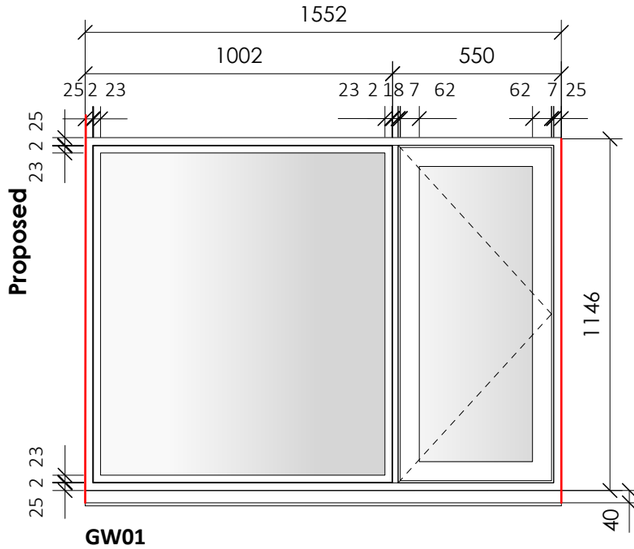

GW01
Location: Small meeeting room
Type: New window in existing opening

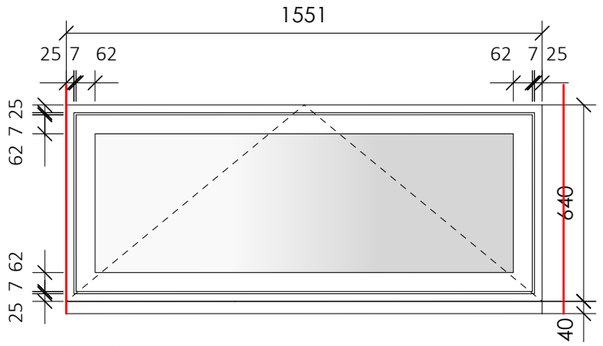

GW02
Access WC
New window in existing opening

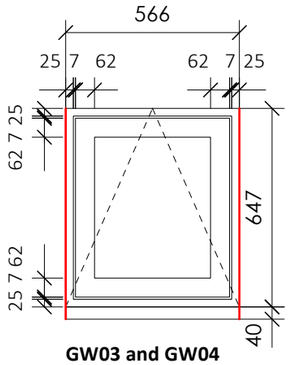

GW03 and GW04
WC 1 and WC 2
New windows in existing openings

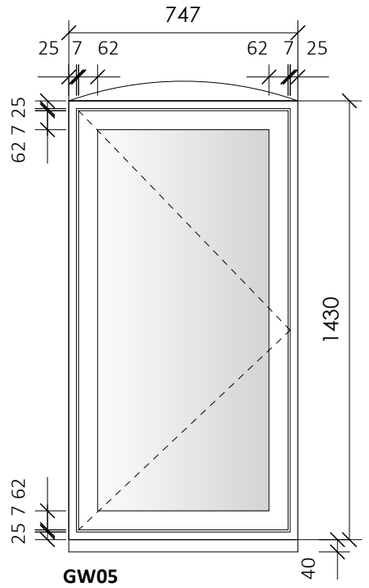

GW05
WC 3
New window in existing opening
Arch infil to match window frame

Existing

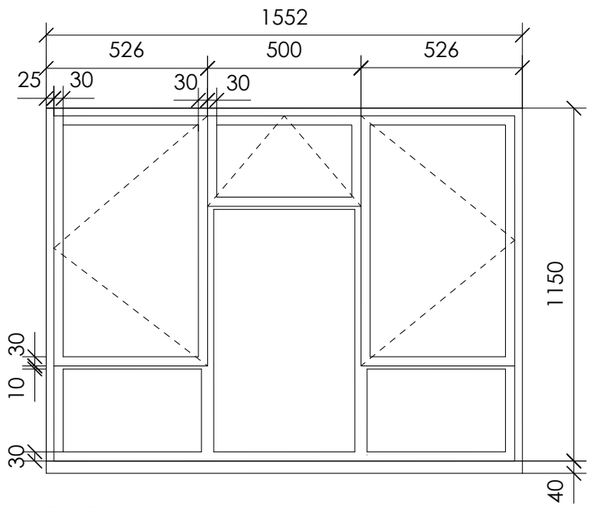

GW01
Location: Small meeeting room

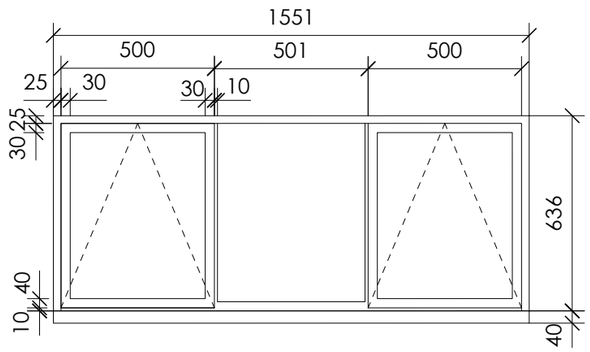

GW02
Access WC

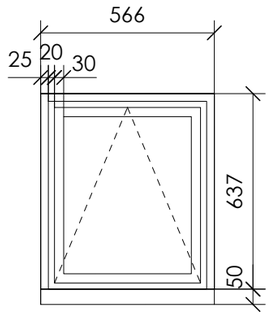

GW03 and GW04
WC 1 and WC 2

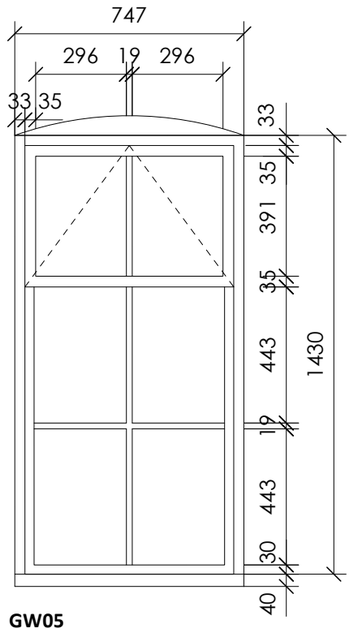

GW05
WC 3

0 1000 1500 mm

Notes

Specification
Rationel Auraplus
Frames and sills finish matt white RAL9010
Glazed with A rated, triple glazed, toughened/laminated as required , sealed units.
Ironmongery - espagnolette with key lock.
Trickle vent for all windows.

For **window detail sections** see drawing FC 33

Building work in connection: Cut out cavity brick closing reveals and insulated cavity closers installed, to eliminate the thermal bridge - cold conducted through brick work around insulated window frames

Revision Notes Date

eskay architects
62 Parkside
Shoreham-by-Sea
BN43 6HA
Tel: 07745 654 556

project
Friends Meeting House
BN11 5DR

drawing
Proposed Window Schedule - Rationel

ref	dwg no.	rev
FC	31	-

scale	size	date
1:20	A3	Dec 2024

status
-