ADUR
DISTRICT COUNCIL

Town and Country Planning Act 1990
Householder Planning Application

Use this form to apply for planning permission to extend or alter your house or flat, to build a garage or other structure on your property or to create access for a vehicle onto a classified road (please read note 9).

Please read the notes before you fill in this form.

1 Please give the address of the property to be altered or extended

6 Dorset Lodge
First Avenue
LANCING
West Sussex
BN15 9QQ

ADUR DISTRICT COUNCIL
PLANNING DIVISION

PLAN No.	A06007868
DATE	05 FEB 2008

2 Type of property

Flat

3 Please describe the development you are applying for.

replace existing timber framed window with UPVC to front. Retrospective planning for UPVC window at rear

4 Applicant (in block capitals)

Name

Mr
A
Wright

Address

6 Dorset Lodge
First Avenue
LANCING
BN15 9QQ
WEST SUSSEX

Telephone

[redacted]

Fax

Email

Agent (if any)

Full Name

Darryl Shear

Address

2 Saffron Close
SHOREHAM BY SEA
West Sussex
BN43 6JF

Telephone

01273 273827
07881 656512

Fax

Email

darrylshear@hotmail.com

5 Please enclose four copies of this form and four sets of plans.
Please number your plans and write the numbers and scales against the titles here.

	Plan Number	Scale
Location Plan	SY 1	1:1250
Block Plan	SY 1	1:500
Floor Plan	Sk 1, Sk 2	1:20
Elevations		
Other	08/085	Photos of ele.

6 Will the development involve cutting down any trees? No
If "Yes", please show these clearly on the block plan.

7 Will the development (including any new or altered access) affect a public footpath or any other public right of way? No

8 **Does this application require a fee?** Yes
(See note 3)

If "No", please choose the option that applies
(See note 3)

If "Yes", please state the fee enclosed £ 135.00
(See note 4)

Signature: [redacted] **Date:** 30-01-08

Please print your name: D. L. SHEAR

Certificate under Article 7 of the Town and Country Planning (General Development Procedure) Order 1995

If anyone else owns the land or part of it, you must fill in Certificate B, which you can get from the Planning Section. You must also tell the owner of the land about this application by serving a notice on them. If you own all of the land, you must fill in Certificate A below.

Certificate A

I confirm that:

- Nobody except the applicant was an owner of any part of the land involved at the beginning of the period of 21 days before the date of this application; and
- none of the land this application relates to is an agricultural holding or part of an agricultural holding.

Signature: [redacted] **Date:** 30-01-08

Please print your name: D.L. SHEAR

Location Plan 1:1250

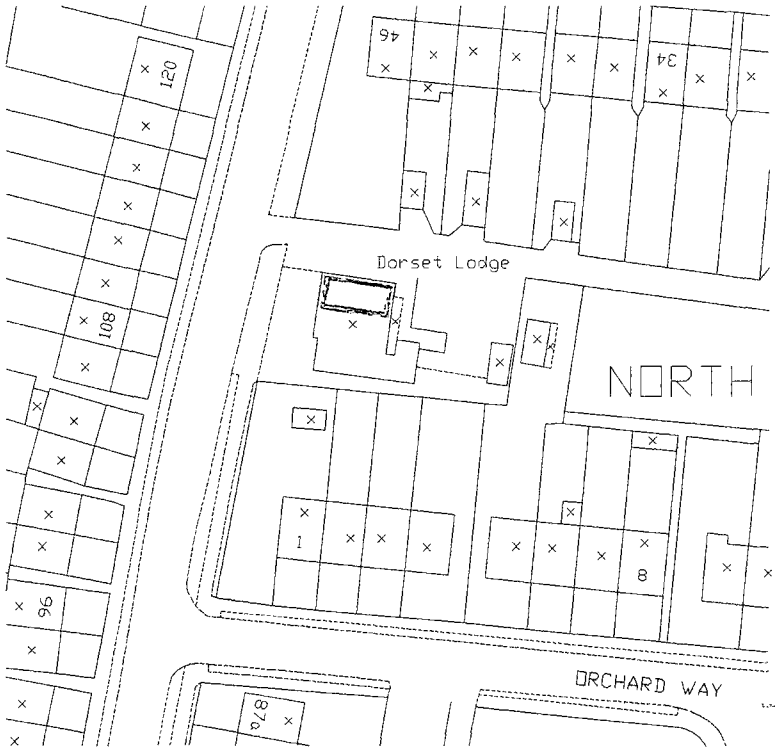

COUNCIL
PLANNING DIVISION
PLAN No. AWB00878
DATE
05 FEB 2008

Block Plan 1:500

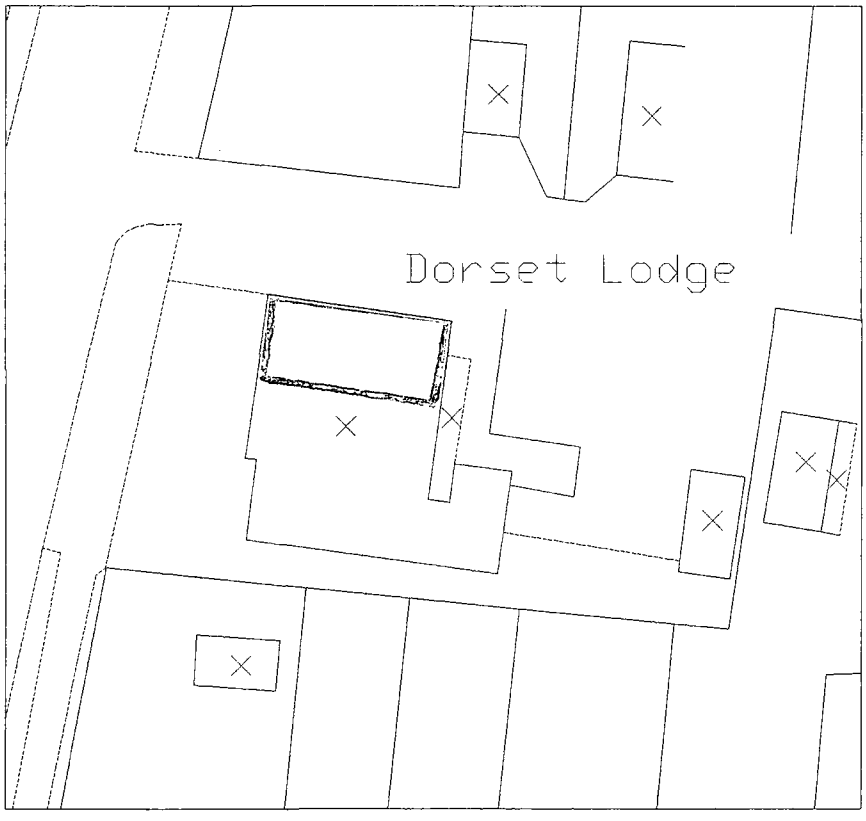

General Notes

No.	Revision/Issue	Date

Firm Name and Address
SHEAR DESIGN
ARCHITECTURAL DESIGNER

Project Name and Address
Mr wright
6 Dorset Lodge
Firts Avenue
Lancing
West Sussex
BN15 9QQ

Project	Sheet
08/085	SY 1
Date: 26.01.08	
Scale: 1:1250 & 1:500	

SHEAR DESIGN
ARCHITECTURAL DESIGNER



RETROSPECTIVE

First floor showing UPVC kitchen window.

OUR DISTRICT COUNCIL
PLANNING DIVISION
PLAN No. ADC607868
DATE 05 FEB 2008



First floor showing window to lounge

Project : Mr Wright

Elevations

Dwg No. : 08/085

Date : 26.01.08

2 Saffron Close,
Shoreham-by -Sea,
West Sussex,
BN43 6JF

Direct line Tel : 01273 273827
Mobile No. : 07881 656512
e-mail : darrylshear@hotmail.com

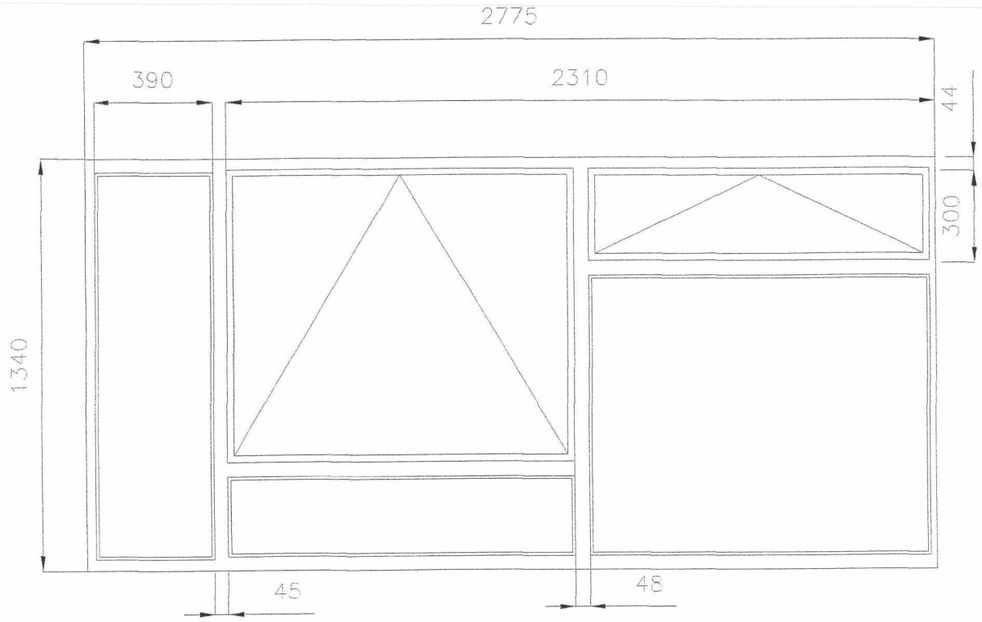

EXISTING LOUNGE WINDOW
2310 X 1340mm

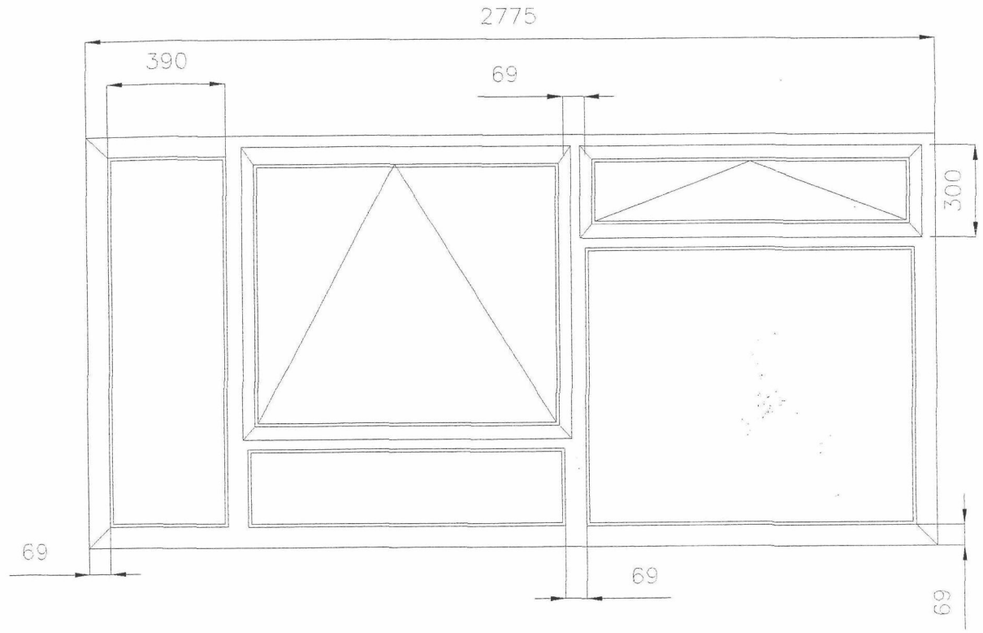

PROPOSED LOUNGE WINDOW
2310 X 1340mm

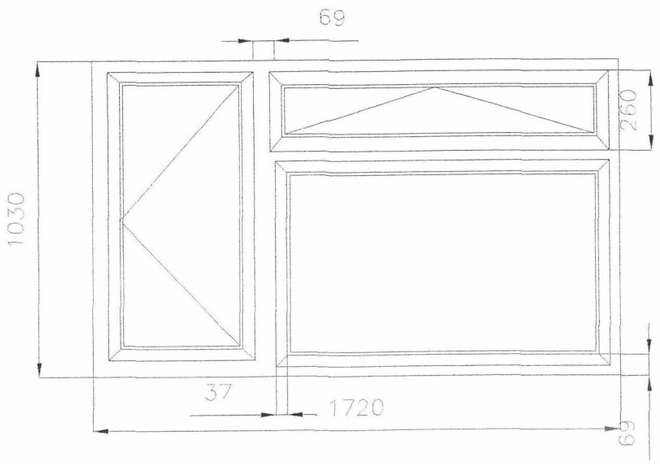

RETROSPECTIVE PLANNING
EXISTING KITCHEN WINDOW
1720 X 1030mm

Existing Timber windows
broken out and removed off site by
contractor. Install new UPVC double glazed
windows as indicated all in white finish,
Contractor to be FENSA registered.

COUNCIL
PLANNING DIVISION
PLAN No. Ard0078/08
DATE 05 FEB 2008

General Notes

No.	Revision/Issue	Date

Firm Name and Address
SHEAR DESIGN
ARCHITECTURAL DESIGNER

Project Name and Address
Mr wright
6 Dorset Lodge
Firts Avenue
Lancing
West Sussex
BN15 9QQ

Project	Sheet
08/085	SK 1
Date: 26.01.08	
Scale: 1:20	

X-Section B - B Scale 1:2

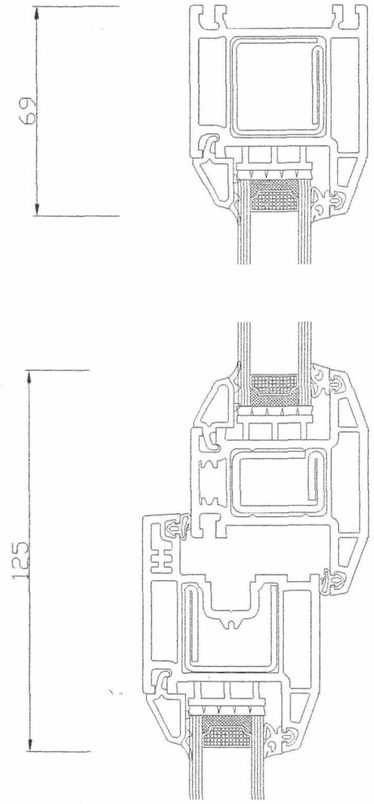

X-Section A - A Scale 1:2

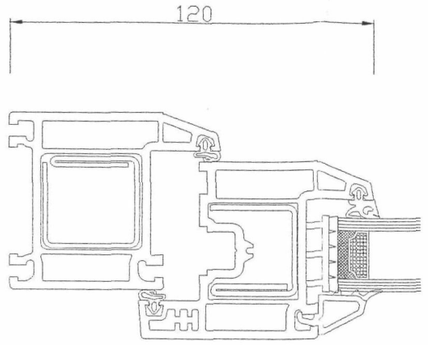

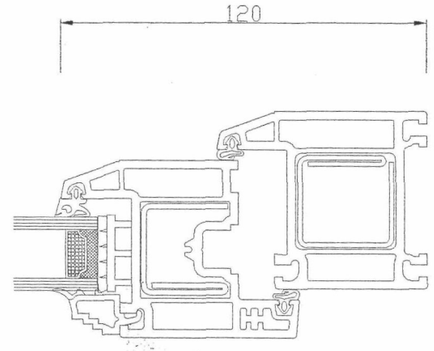

TYPICAL WINDOW SECTION DETAIL

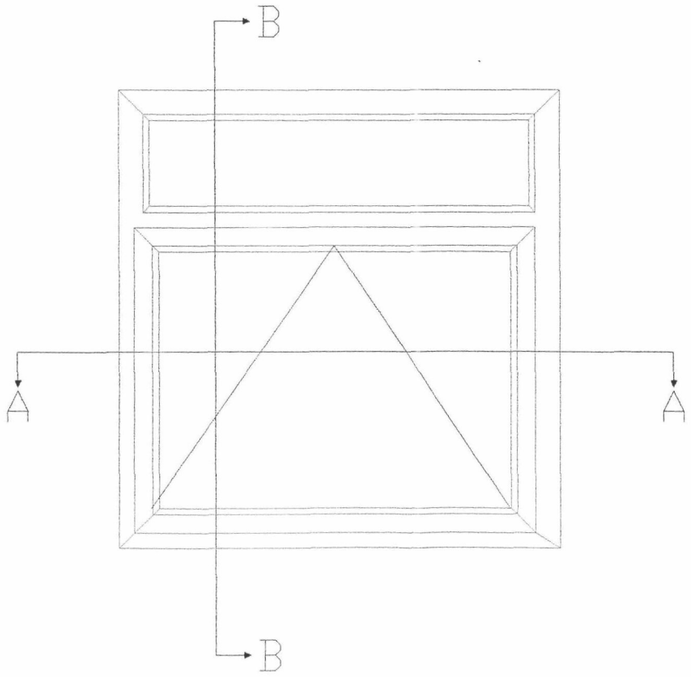

General Notes

PLANNING DIVISION
LAN No. Arb0078/08
0 5 FEB 2008

No.	Revision/Issue	Date

Firm Name and Address

SHEAR DESIGN
ARCHITECTURAL DESIGNER

Project Name and Address

Mr wright
6 Dorset Lodge
Firts Avenue
Lancing
West Sussex
BN15 9QQ

Project	Sheet
08/085	SK 2
Date: 26.01.08	
Scale: 1:2	