

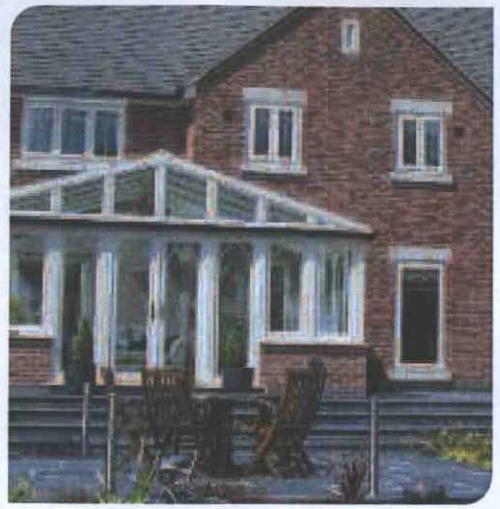

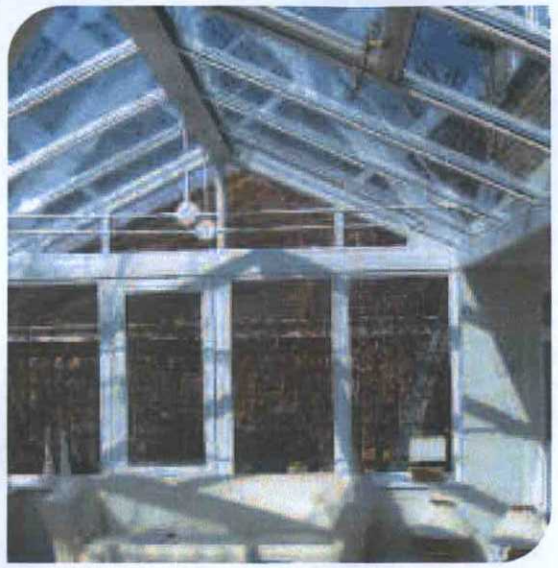

ADUR & WORTHING
PLANNING SERVICES

PLAN	AWDM/0887/15
DATE VALID	10 JUN 2015

LINIAR®
Enhancing Homes & Gardens

LINIAR WINDOWS

SPECIFIER'S GUIDE

Issue 3

Your local Liniar stockist:

All installers of Liniar products are independent companies and whilst we will periodically monitor installers' performance, Liniar cannot give any contractual guarantees in respect of installation standards. In the unlikely event that you encounter any problems with an installation of Liniar products please contact our customer service department, who will endeavour to assist you.

LINIAR®
Enhancing Homes & Gardens

Flamstead House • Denby Hall Business Park • Denby • Derbyshire • DE5 8JX
Tel: 01332 883 900 • Fax: 01332 883 901
Email: sales@liniar.co.uk • Web: www.liniar.co.uk

Liniar Ltd is a division of Flamstead Holdings

Manufactured in the UK



FLAMSTEAD HOLDINGS

Linear is a new name in the windows industry – designed by a team with bags of experience and a different attitude. At Linear we understand the problems faced by fabricators. That's why, when we created our system, we worked hard to design these issues out.

Strength from Within

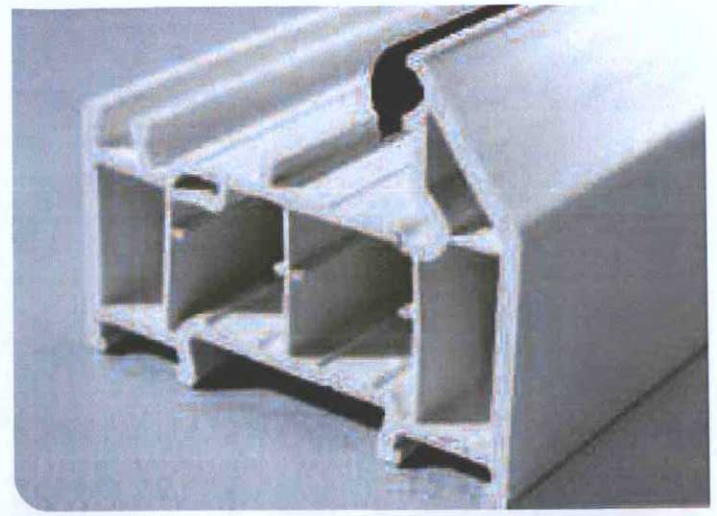

Take the issue of steel reinforcement, for example. We know you don't like having to cut steel. So we designed our system with a unique reinforcement system that substantially reduces the need to use steel. Of course, we have provided screw retaining pockets for hardware but other than that, our system reinforces itself! So you can spend more time fitting windows and less time constructing them. And that's just one of the many features that make the Linear system so different.

A Greener View



Take the issue of Window Energy Ratings (WER's) for example. Most manufacturers are scrambling to achieve an 'A rating' with products designed years ago. Not Linear – we have designed a brand new system, capable of producing class leading results, right out of the box.

Unleaded



Take the issue of eliminating the use of lead stabilisers, for example. All manufacturers are committed to solving the problem, whatever it takes. Some are scratching their heads trying to figure it out. Not Linear – we have created a 100% lead free system right out of the box. And that's just one of the many features that make the Linear system so different.

www.linear.co.uk



Linear Company Profile

HL Plastics manufactures an impressive array of standard and bespoke products, utilising both extrusion and moulding technologies, supported by a range of secondary processes for specialist finishing.

Design, tool making and manufacturing are all housed in our state-of-the-art facility, which contains some of the most advanced extrusion and moulding equipment available. Well known for our capabilities as a trade supplier of extruded profiles and injection moulded products, HL also manufactures PVCu decking, fencing, and caravan veranda products - marketed under the brand of our sister company Linear.

To find out more about Linear products or to get a quote, please contact us:

Linear Windows, Flamstead House, Denby Hall Business Park, Denby, Derbyshire, DE5 8JX
Tel: **01332 883 900** Fax: **01332 883 901** **sales@linear.co.uk** **www.linear.co.uk**

01332 883 900

contents

section 1

introduction

1.1 product development **05**
1.2 accreditation **06**
1.3 system credentials **07**
1.3 quality assurance **07**

section 2

linear components

2.1 main profiles & face sizes **08**
2.11 sculptured **09**
2.2 cills **10**
2.3 beads, reinforcements & ancillaries **11**
2.4 ancillaries, continued **12**
2.5 ancillaries, continued **13**

section 3

typical assemblies

3.1 casement windows internally glazed **14**
3.2 casement windows externally glazed **15**
3.3 tilt & turn window **16**
3.4 residential door internally glazed **17**
3.5 french door internally glazed **18**
3.6 french door meeting stile assembly **19**
3.7 pivot window internally glazed **20**
3.8 tilt & slide patio door internally glazed **21**

section 4

joint assemblies

4.1 butt joints **22**
4.2 variable joints **23**
4.3 fixed joints **24**

section 5

wind loading

5.1 LCW011 / LCW016 / LCW021 / LCW022 **25**
5.2 LCW026 / LCW027 / LCW029 **26**
5.3 LCW031 / LCW032 / LCW035 **27**
5.4 LCW036 / LCW037 **28**
5.5 LAN211 / LAN212 / LAN213 **29**
5.6 LAN231 / LAN232 / LAN233 / LAN251 LAN252 / LAN253 **30**

section 6

load bearing capacity

6.1 technical information **31**
6.2 LAN211 / LAN212 **32**
6.3 LAN213 / LAN231 **33**
6.4 LAN232 / LAN233 **34**
6.5 LAN251 / LAN252 **35**
6.6 LAN253 **36**

section 7

energy ratings

7.1 energy ratings **37**
7.2 linear windows system for the energy conscious **38**

section 8

notes **39**

introduction

Product Development

The new Linear window system is the latest exciting addition to the popular home and garden range. Although Linear is a new name in the windows market, Managing Director Roger L Hartshorn has been highly influential in the industry for many years, and he's assembled a team of specialists to develop the new windows range.

Experienced Personnel

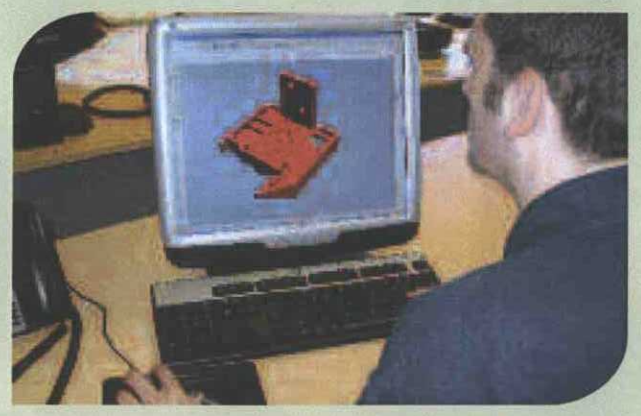

Solid Works Software

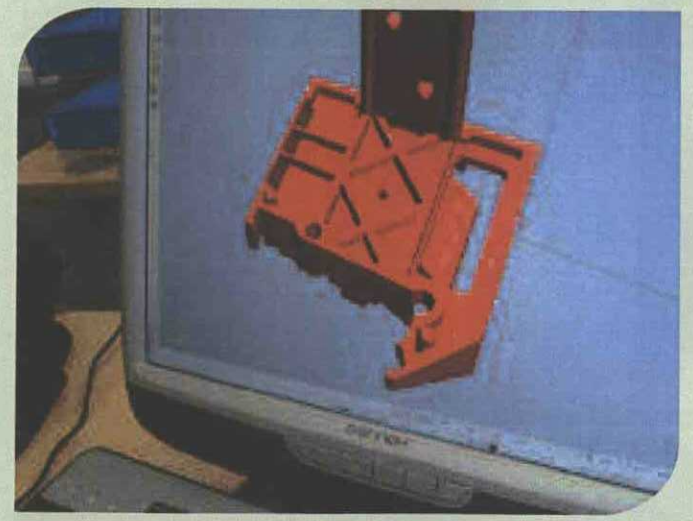

Rapid Prototype Machine

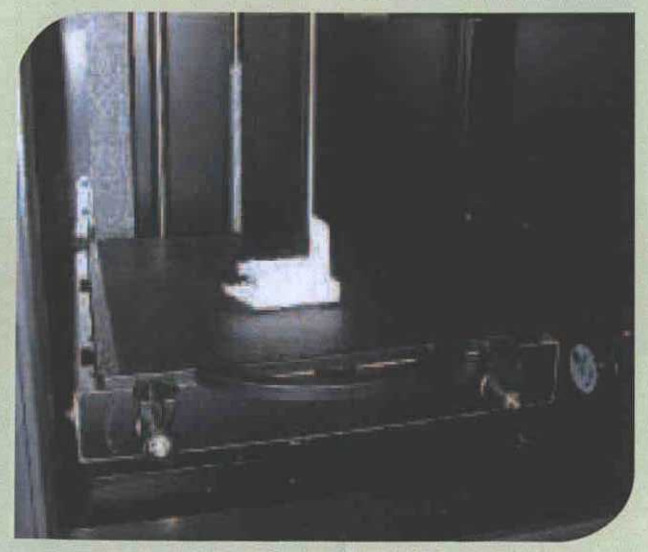

Production Moulding

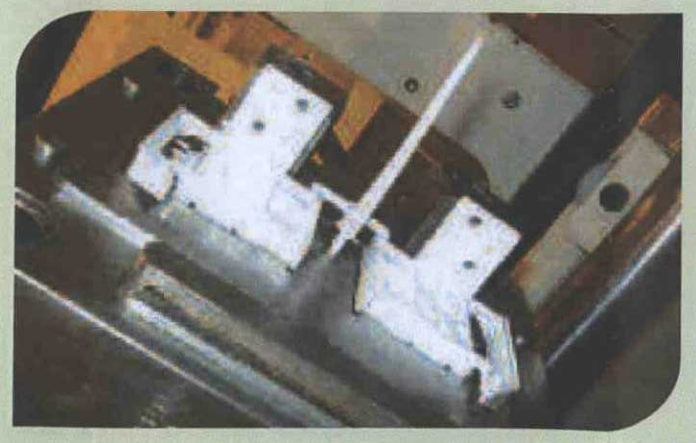

Accreditation

Window sizes and level of performance

BSI Kitemarks:

BS EN 12608:2003 KM522037	PVCu profile for the fabrication of windows and doors.
BS7950:1997 KM522039	Specification for enhanced security performance of casement and tilt/turn windows in domestic applications.
PAS 23-1:1999 KM522040	General Performance requirements for door assemblies.
PAS 24-1:1999 KM522040	Enhanced security performance requirements for door assemblies.
BS7412:2007	Specification for windows and doorsets made from PVCu extruded hollow profiles. Meets the requirements of, enabling fabricators to achieve the kitemark.
ISO 9001:2000 FM52496	Quality management systems requirements.

Linear window and door system has gained Secured By Design status by The Association of Chief Police Officers.

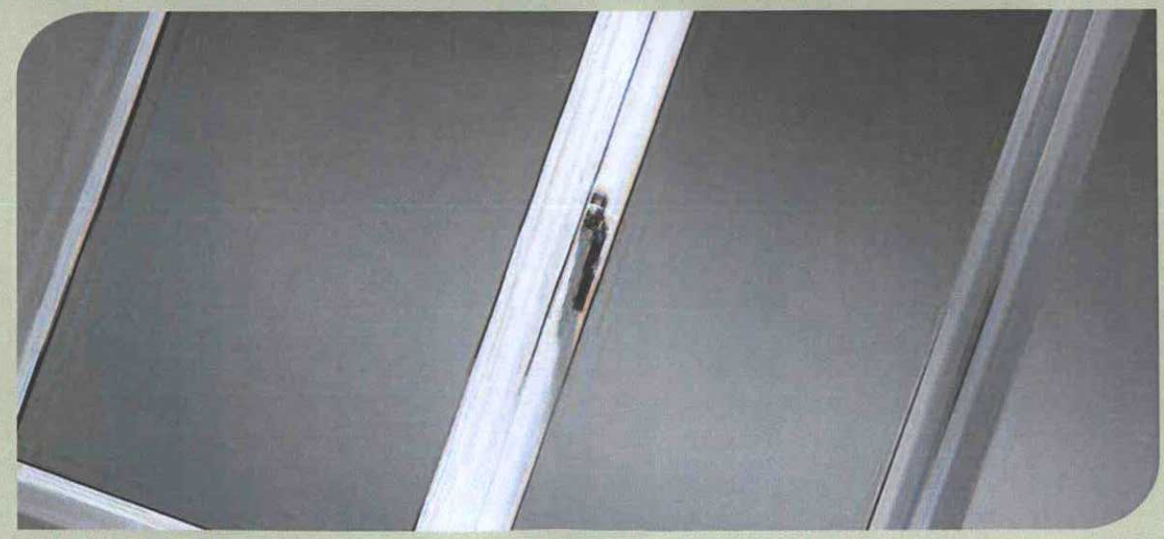

System Credentials

- High gloss, lead free materials used in the manufacture of all frames & ancillary products.
- WER 'A' rating for thermal efficiency is achievable with many glazed unit combinations.
- Designed specifically as a pre-gasketted system, featuring a patented double-action bubble gasket on all frames. No corner cleaning of the gasket or inner rebate required. Patent UK0802551.2.
- Enclosed screw retaining pocket within both outer & sash frames, typically halving the steel requirement. Quicker & cheaper to manufacture, easier to re-cycle.
- Choice of chamfered & sculptured systems available, fully inter-changeable.
- Symmetrical drainage for rebate & bead areas on all profiles.
- Identical bead & rebate detail, ideal for internal glazing.
- Snap together feature on 165mm cill, outer frames, low thresholds, frame extensions & 90° corner post.
- Low thresholds available in 'Part M' compliant & standard format, both with shootbolt facility. No end milling of the door jambs required when using the connector moulding. Reg Des UK4006283.
- 22mm backset hardware for both internally & externally beaded sash windows, including night vent facility.
- Equal frame cover on both faces of door sashes.
- Comprehensive range of ancillary products.
- Available in white, rosewood & oak finishes along with foiled on white options.

Quality Assurance

As an accredited ISO9001 company, we are committed to providing a high quality product, time after time.

All elements of the Linear window system undergo rigorous quality procedures, in line with BS EN 12608:2003.

The dedicated staff of the Quality Department use specialist equipment to carry out crucial checks on every profile, 24 hours a day.





outer frame

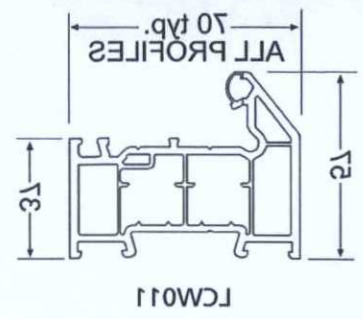

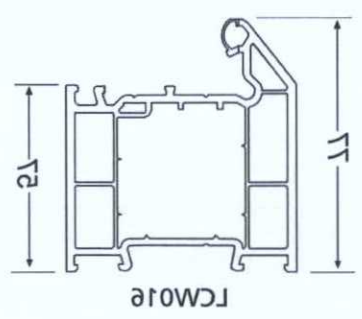

transom / mullion

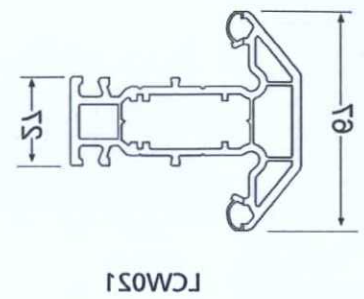

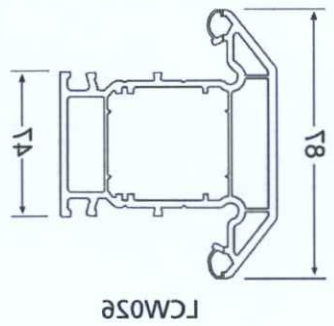

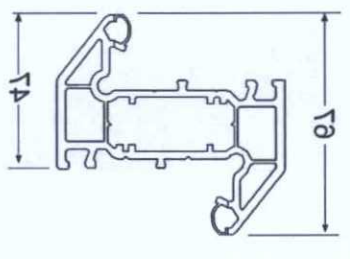

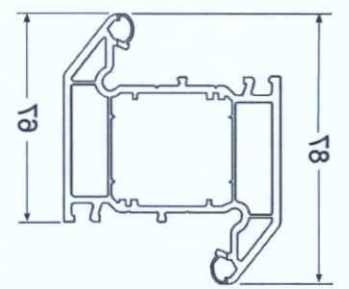

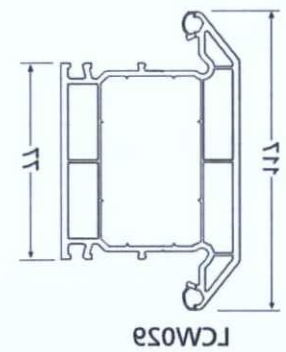

sash

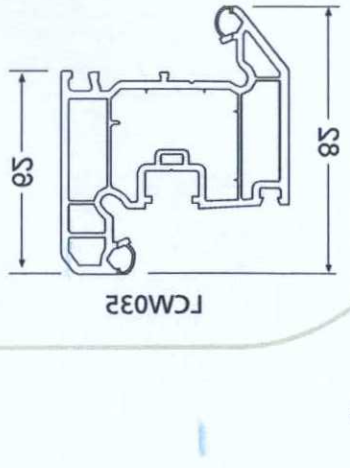

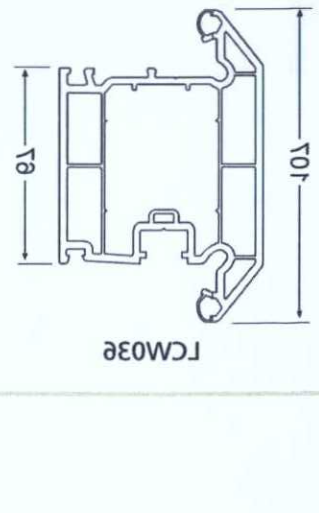

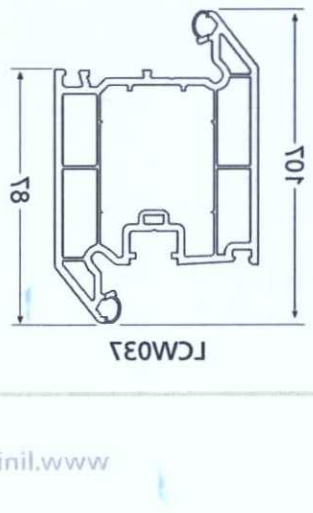

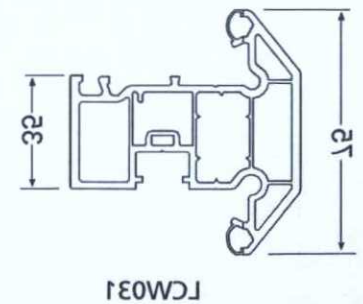

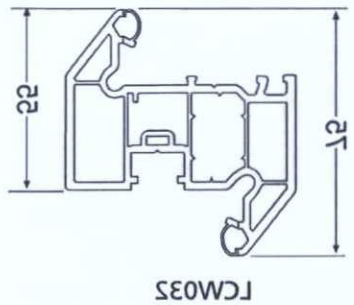

sculptured

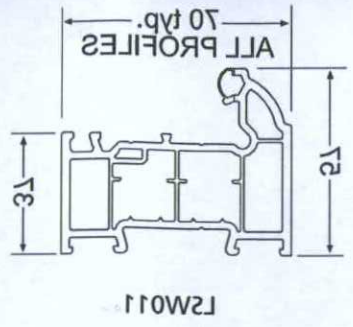

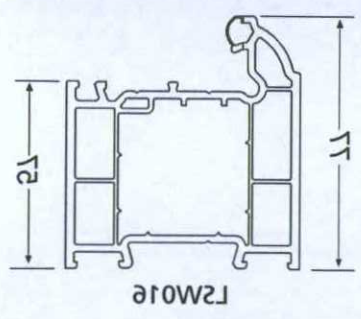

transom / mullion

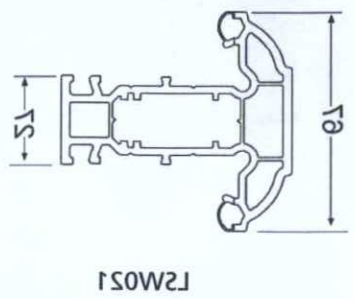

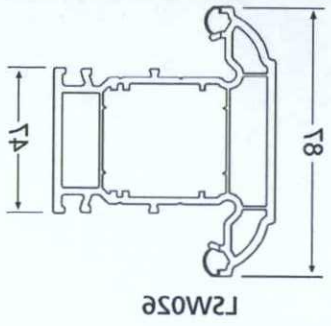

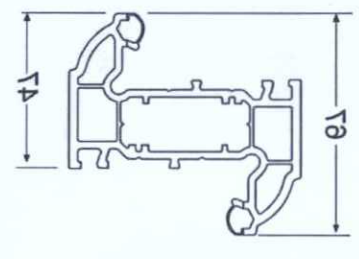

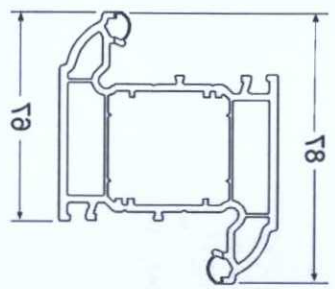

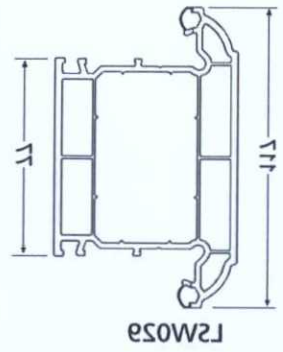

sash

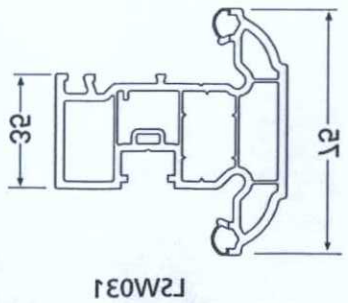

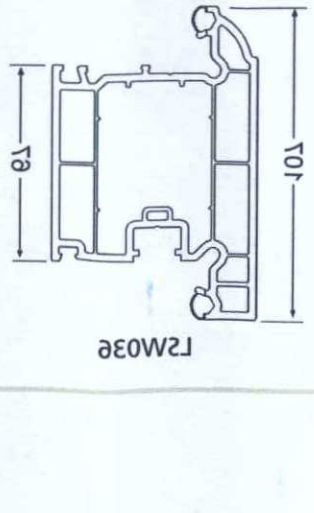

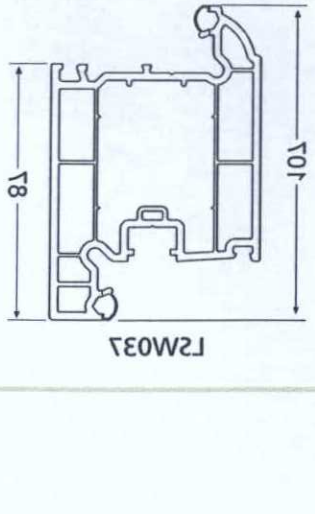

www.linear.co.uk 01332 883 900

liniar components

section 2.11

cills

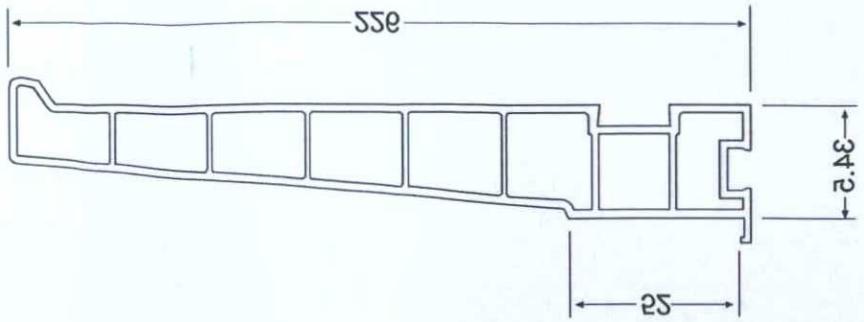

LCL180

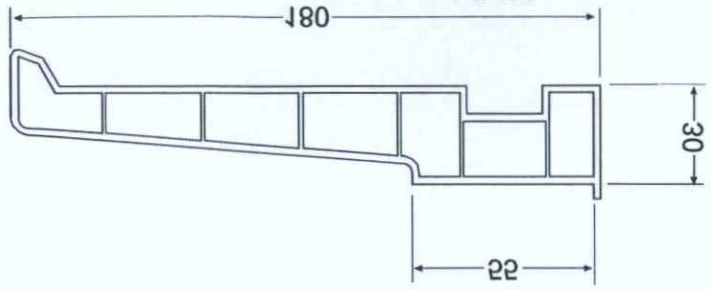

LCL165

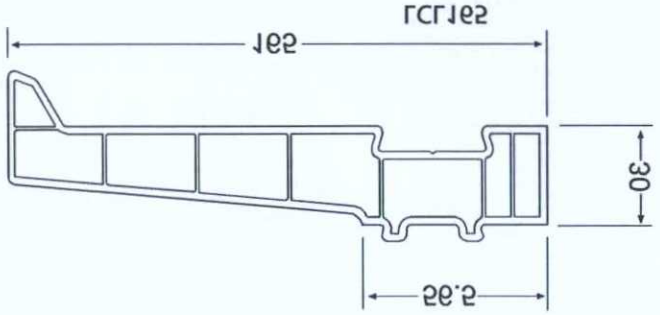

LCL150

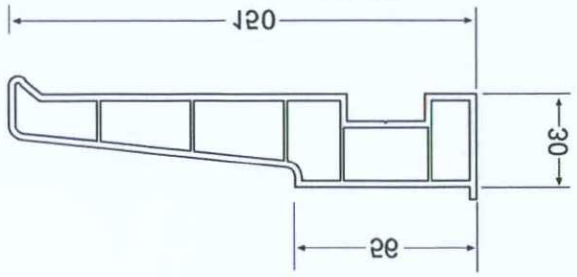

LCL085

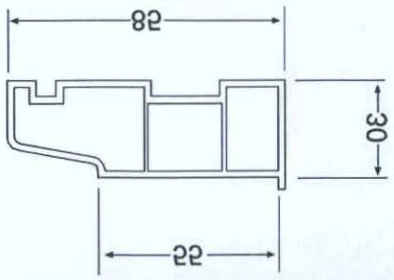

liniar components

section 2.2

beads



reinforcements

steel

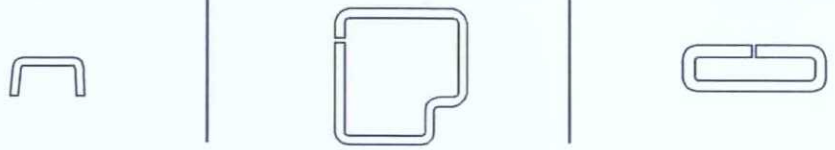



aluminium

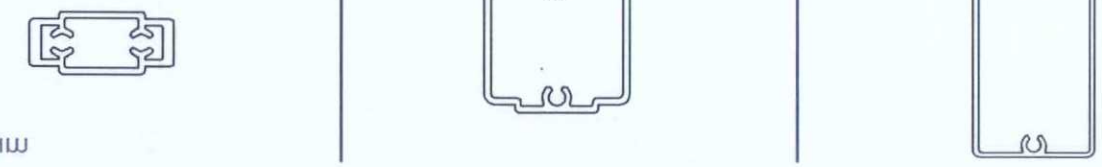

ancillaries

PVCu





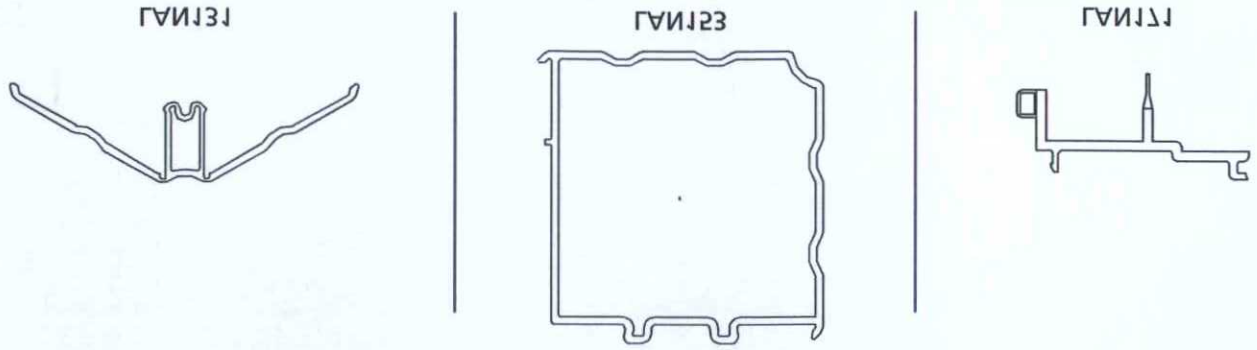

section 2.3
linear components

ancillaries
aluminium

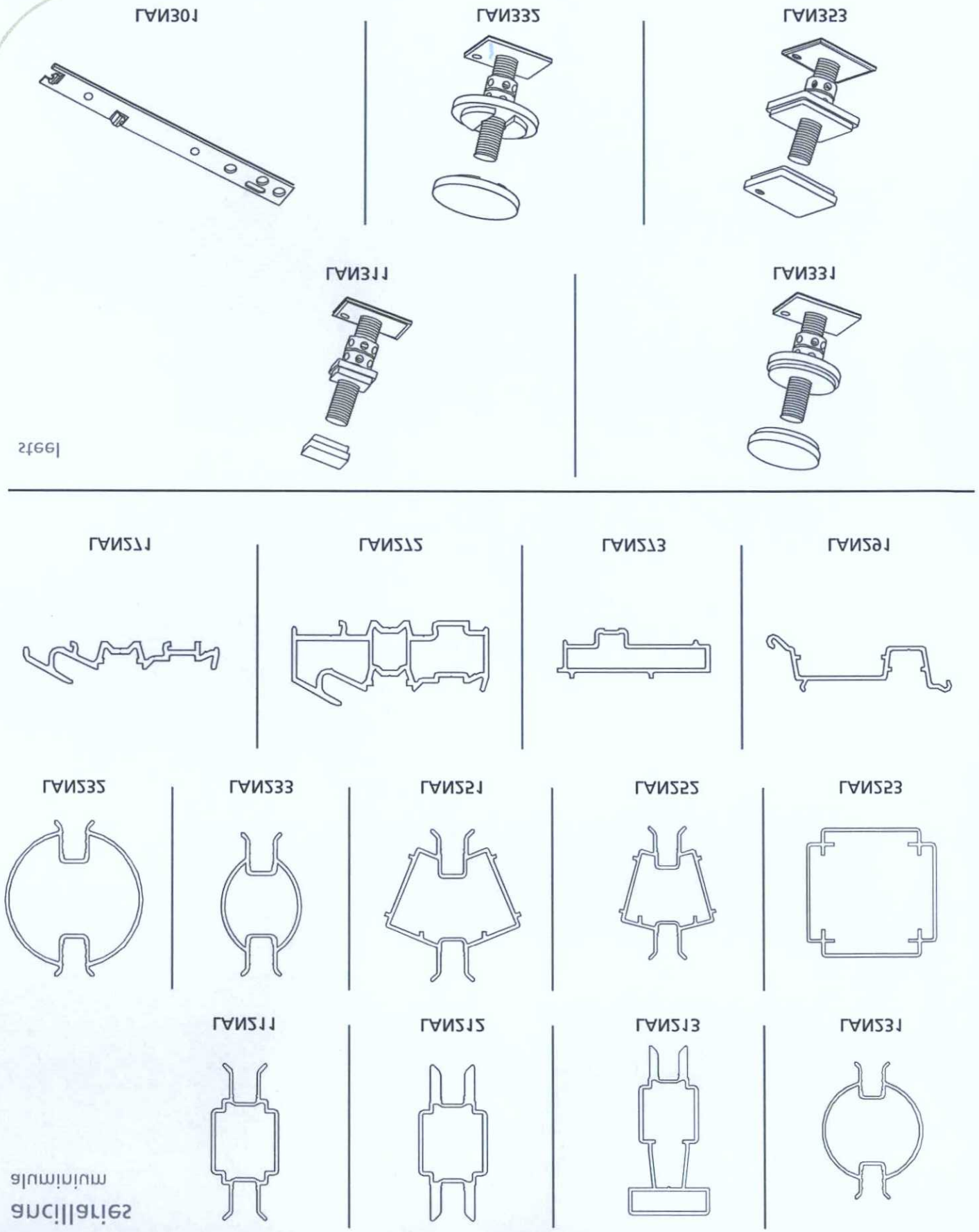

section 2.4
linear components

ancillaries
mouldings

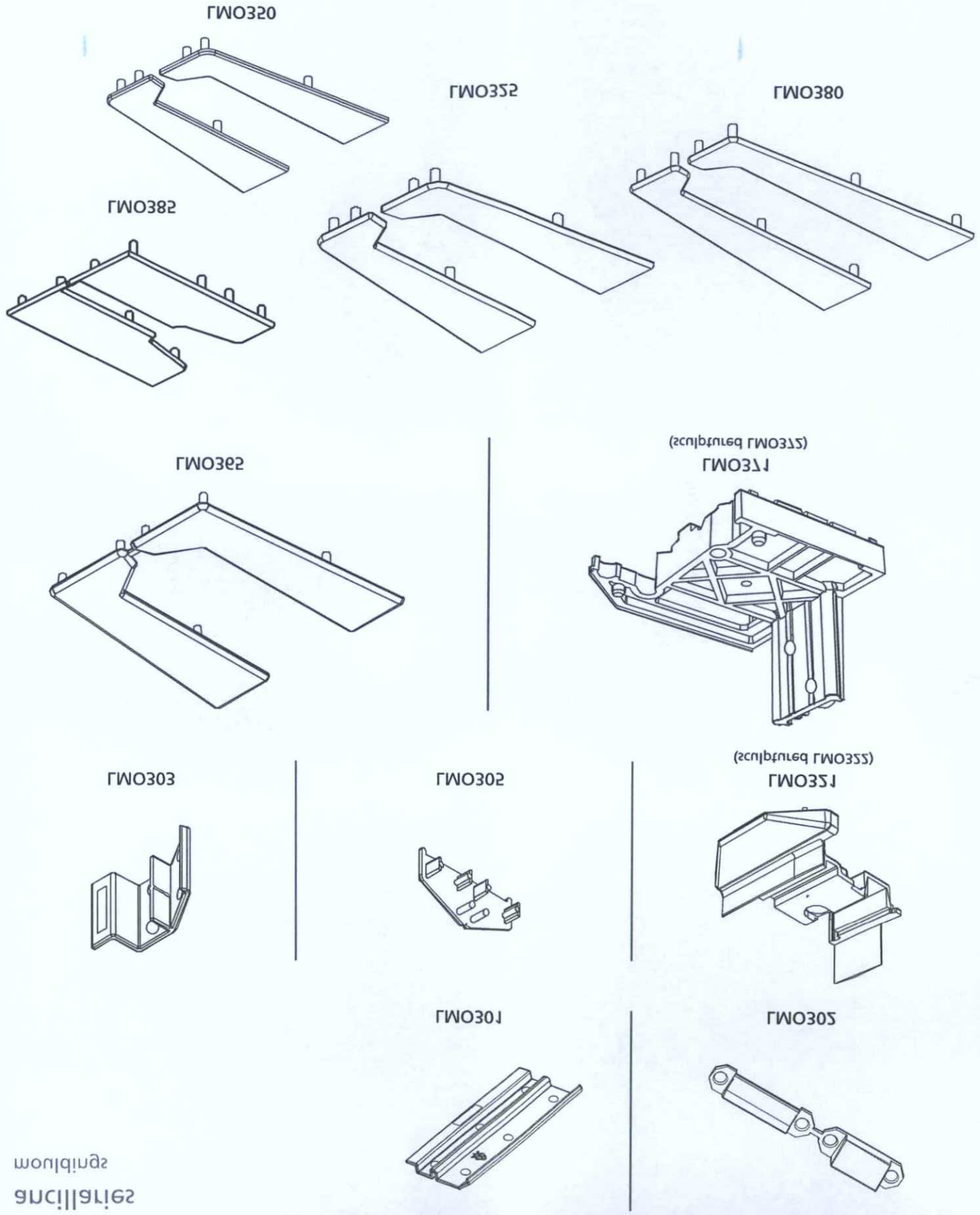

casement window

internally glazed

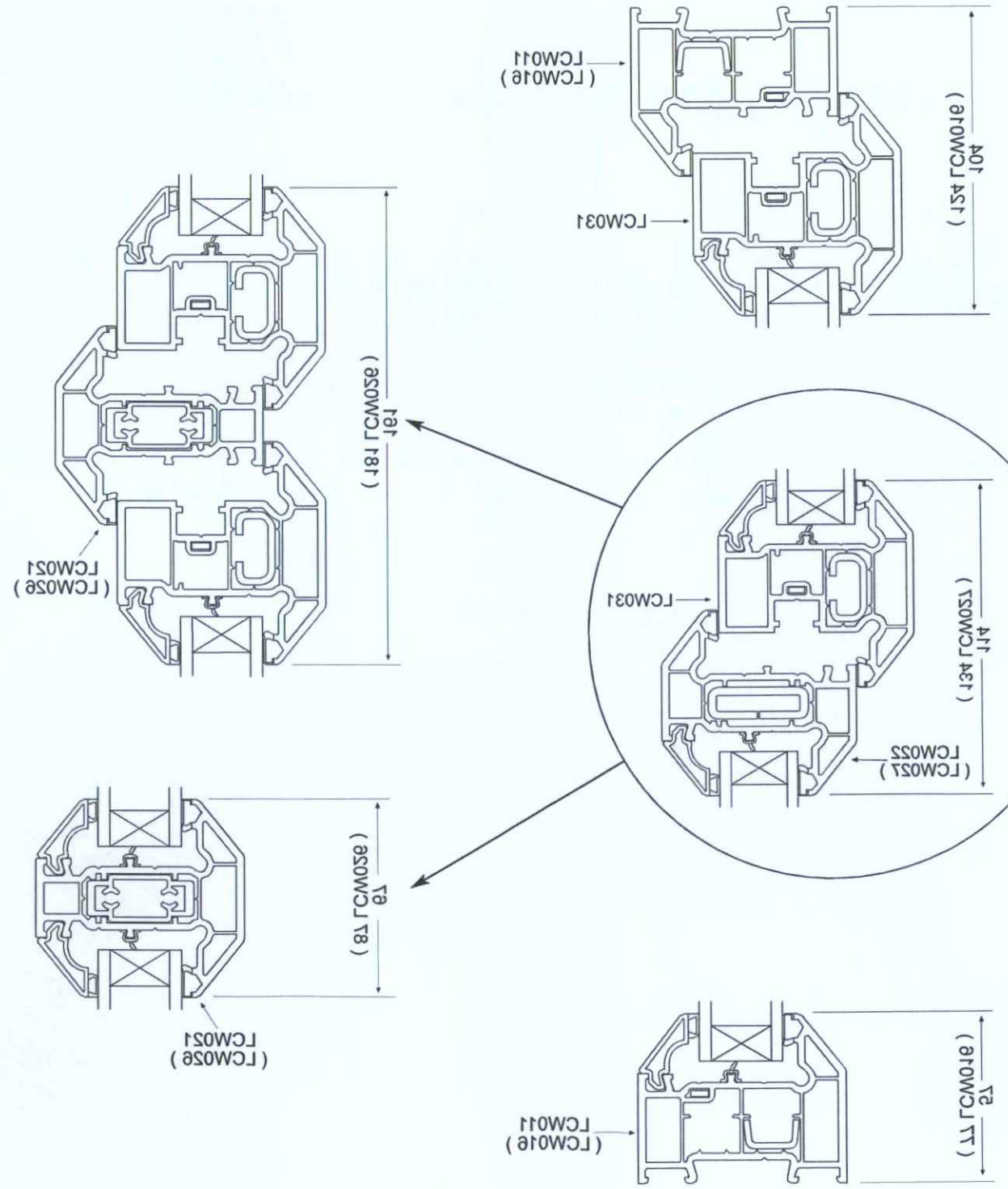

casement window

externally glazed

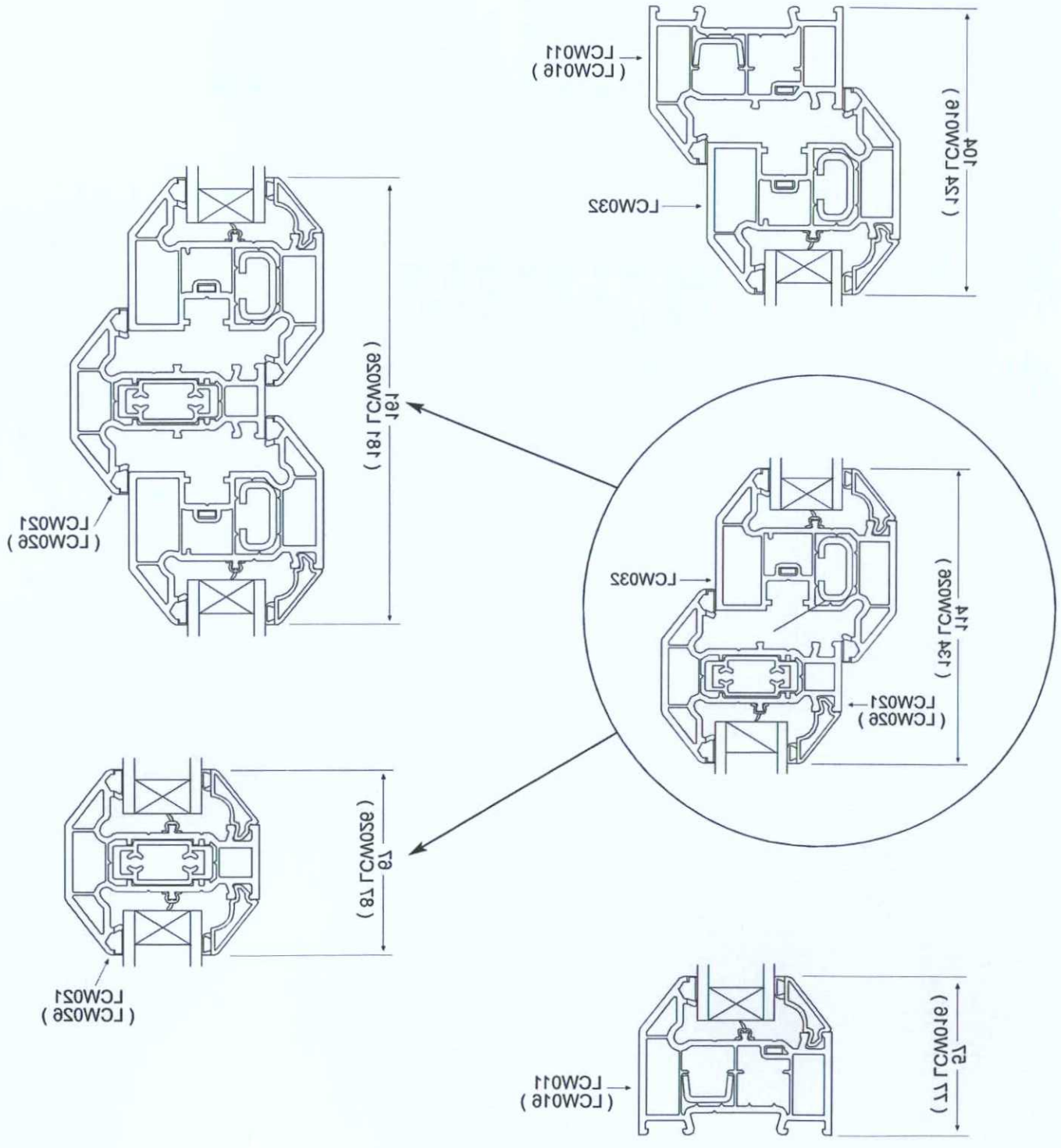

tilt & turn window

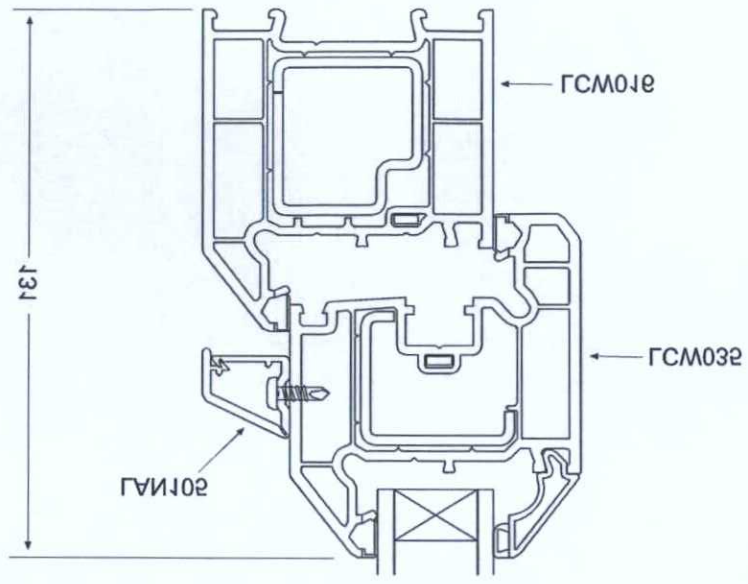

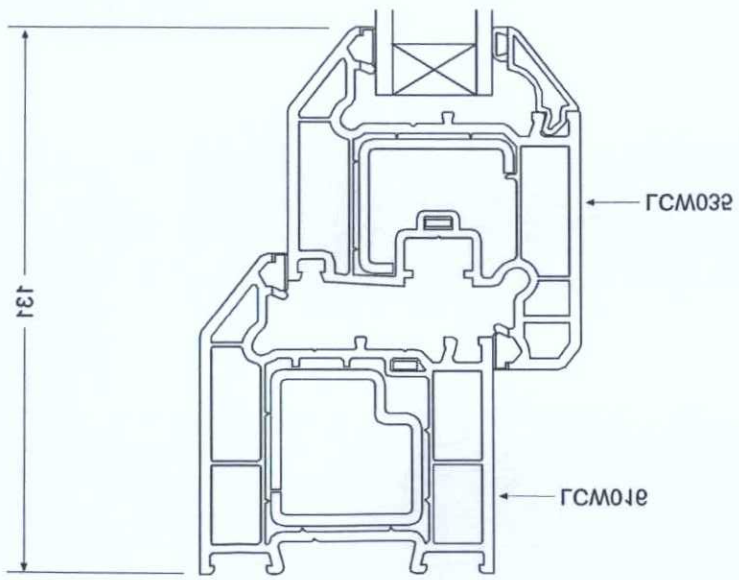

residential door

internally glazed

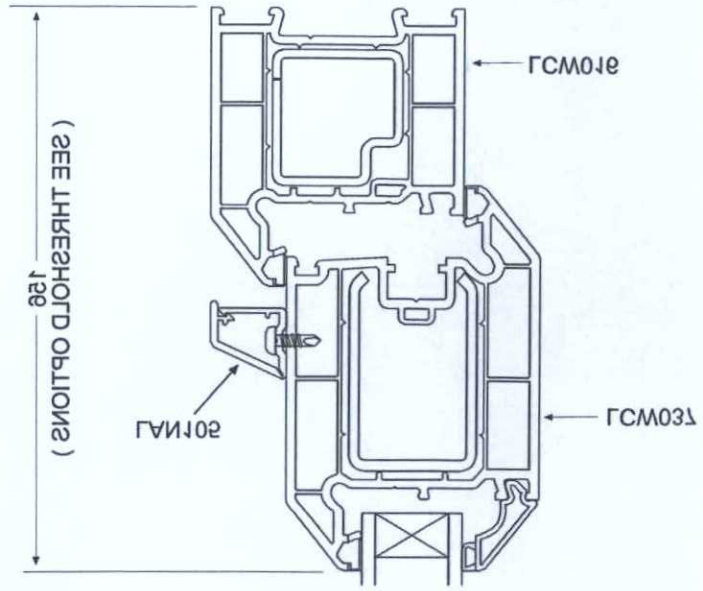

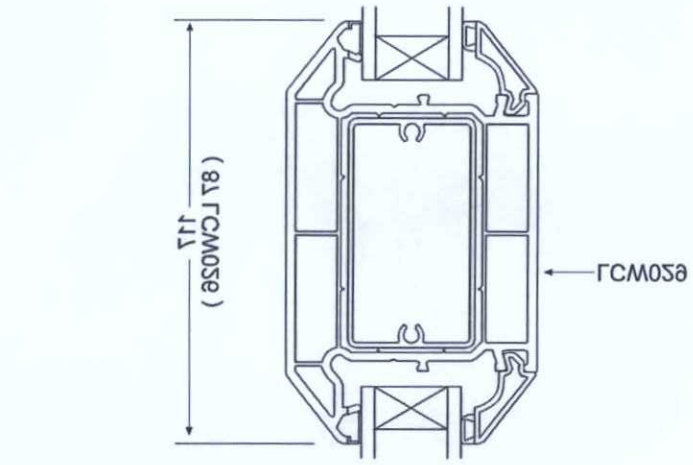

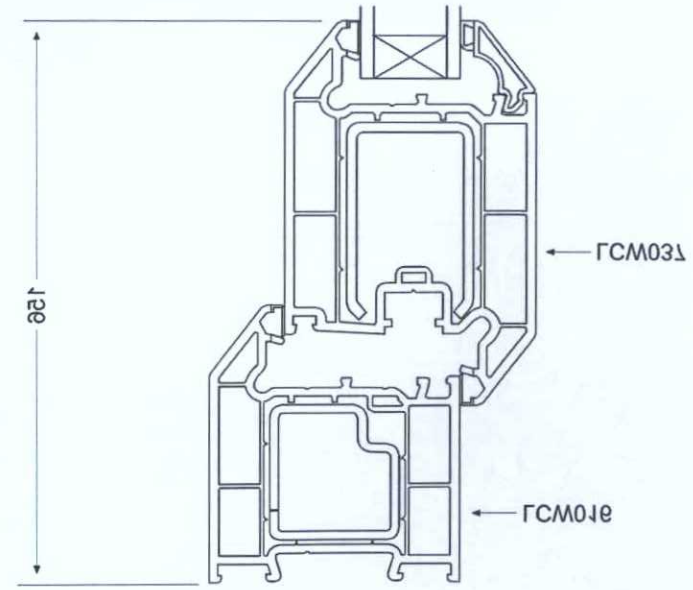

LCW011 Main Frame Threshold Option

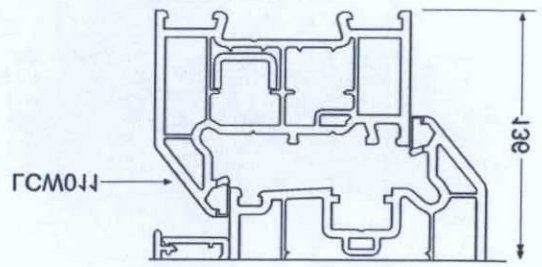

Standard Low Threshold Option

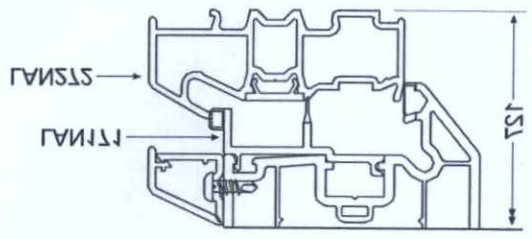

'Part M' Compliant Low Threshold Option

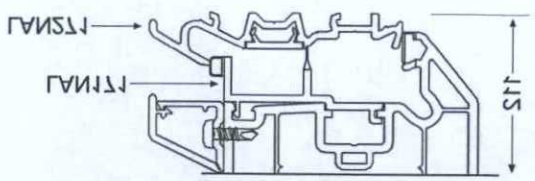

internally glazed

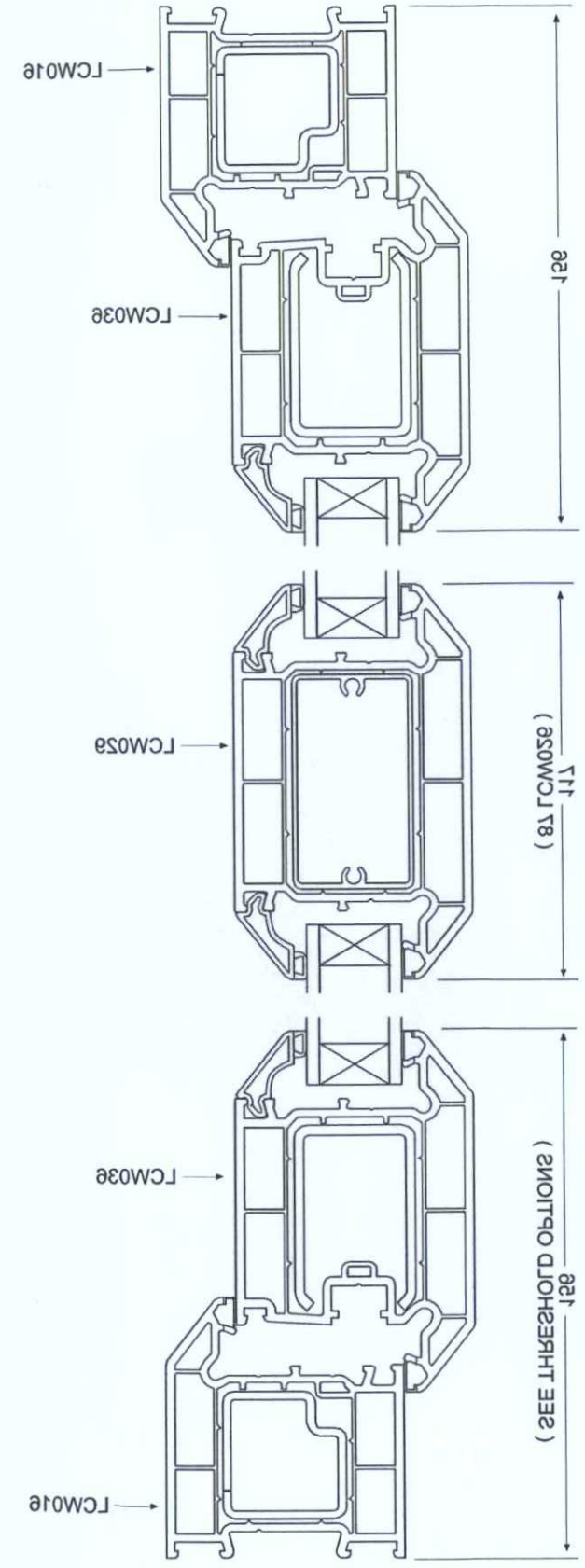

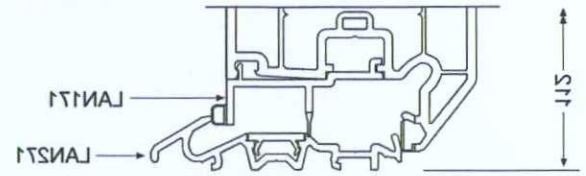

'Part M' Compliant Low Threshold Option

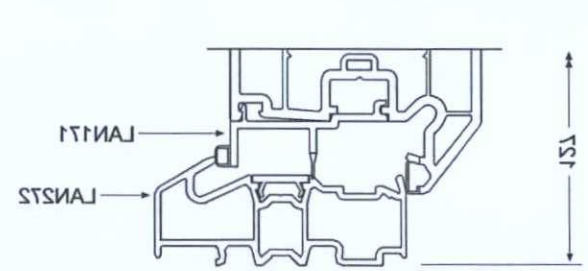

Standard Low Threshold Option

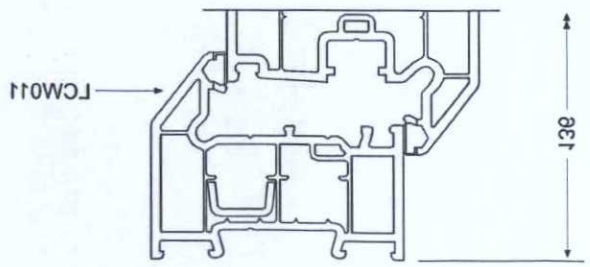

LCW011 Main Frame Threshold Option

meeting stile assembly

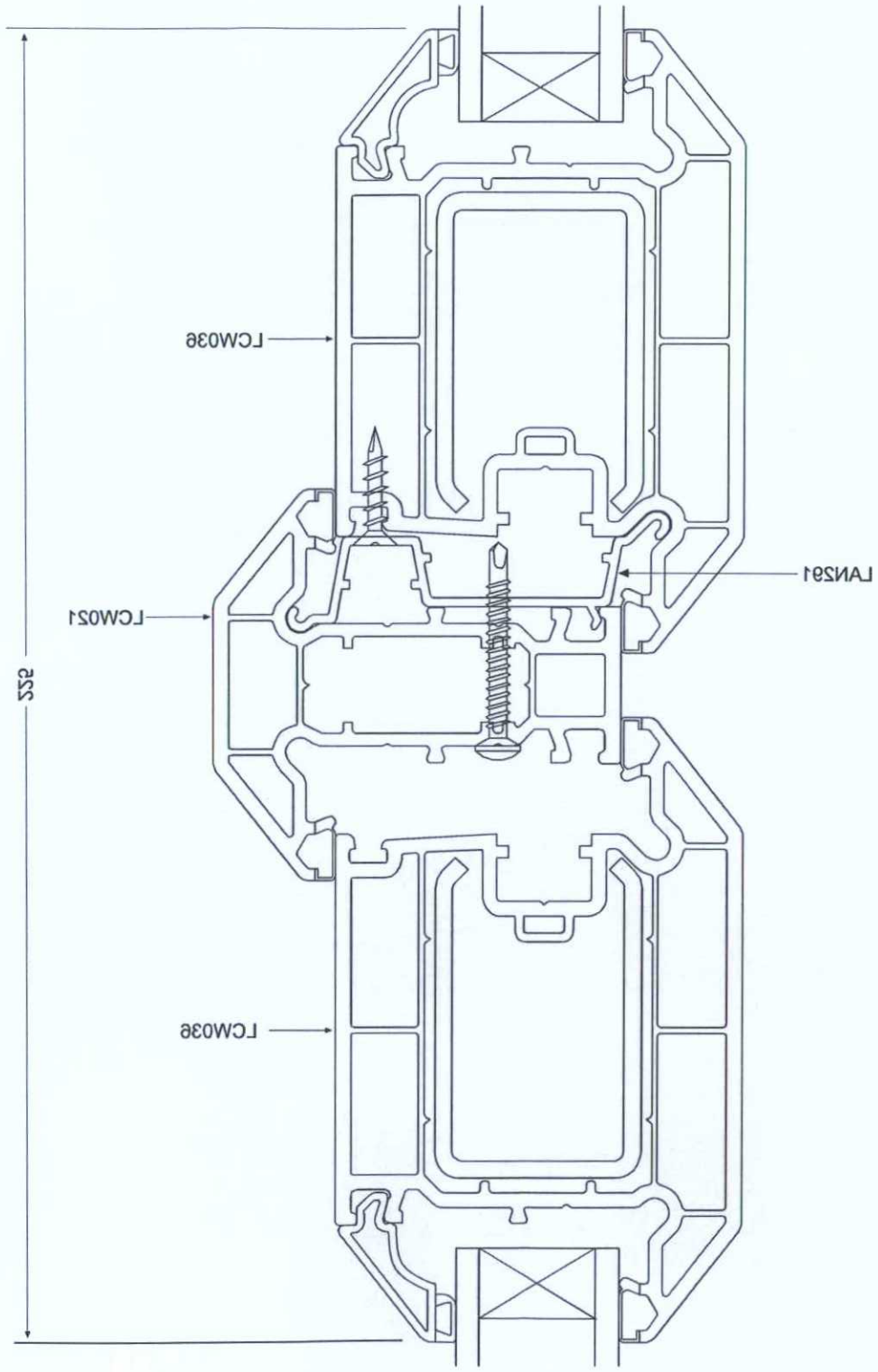

www.linear.co.uk 01332 883 900

pivot window

3.1

Internally glazed

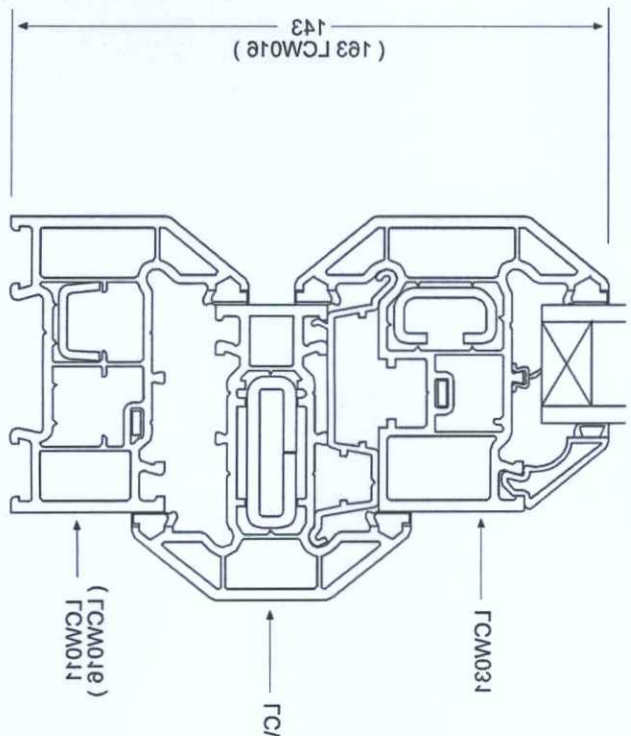

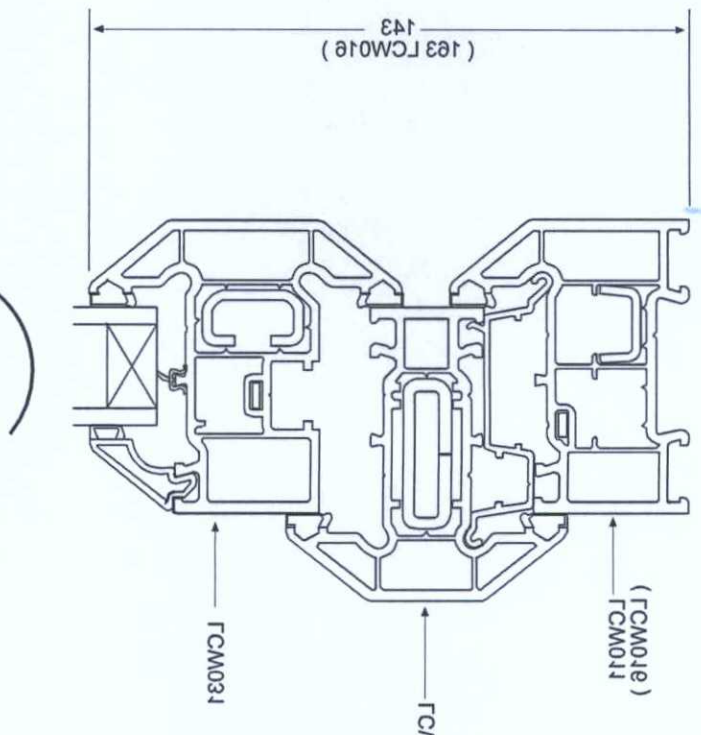

tilt & slide patio door

3.8

Internally glazed

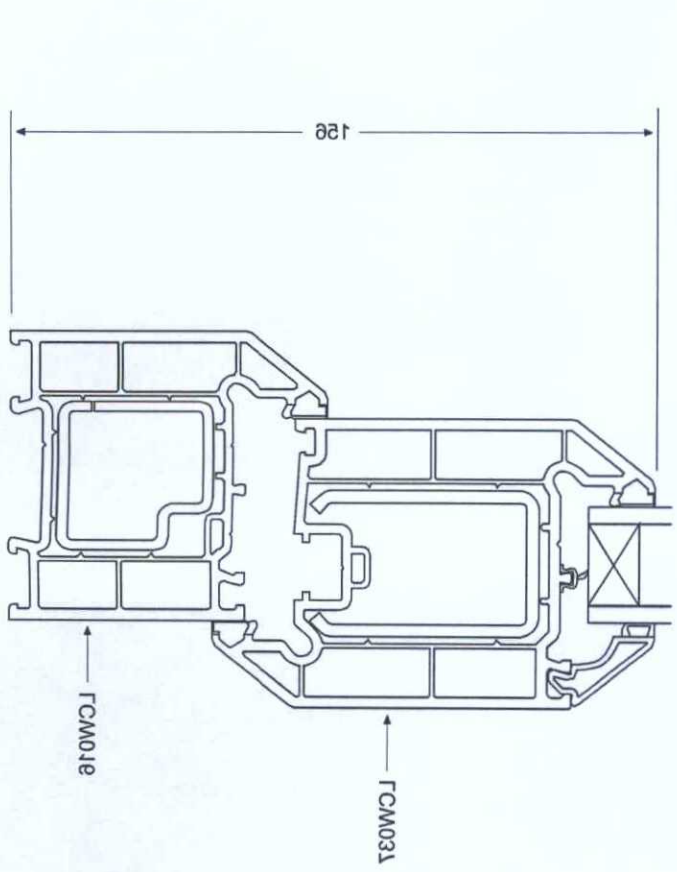

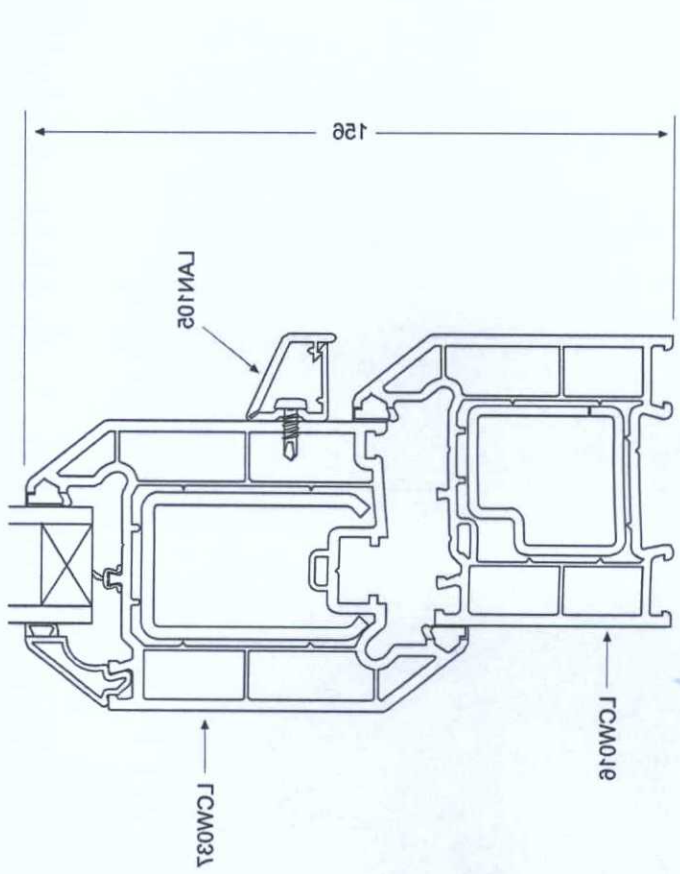

www.linear.co.uk 01332 883 900

joint assemblies

butt joints

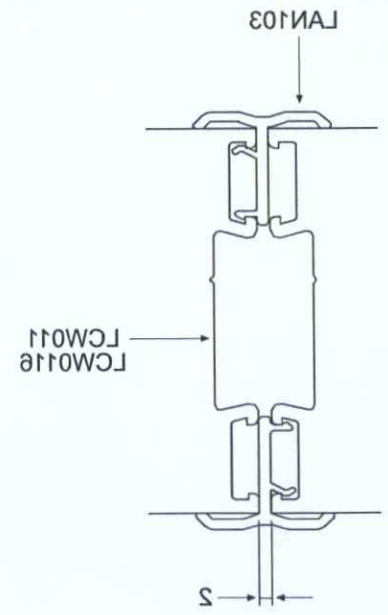

PVCu Joint

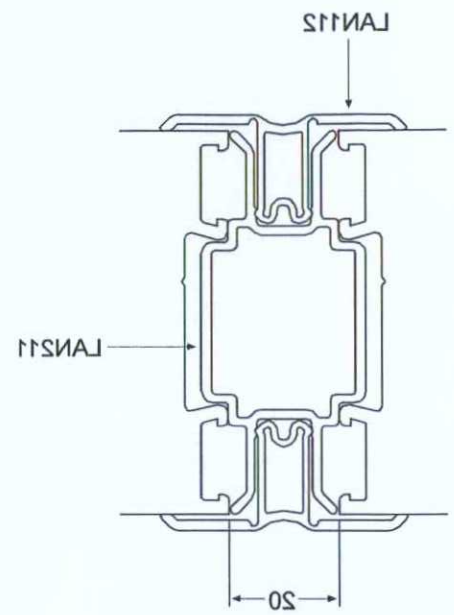

Standard Butt Joint

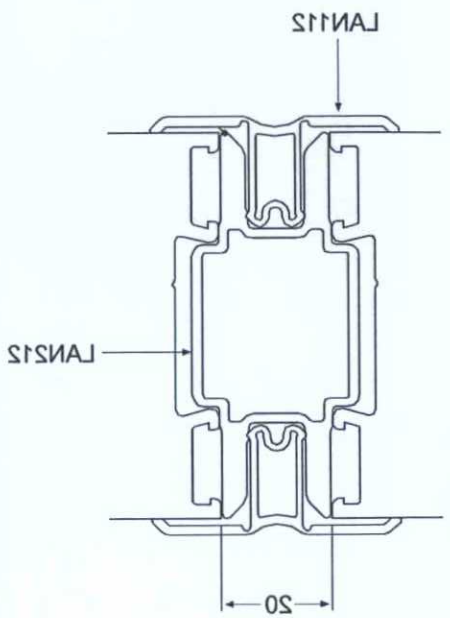

Medium Duty Butt Joint

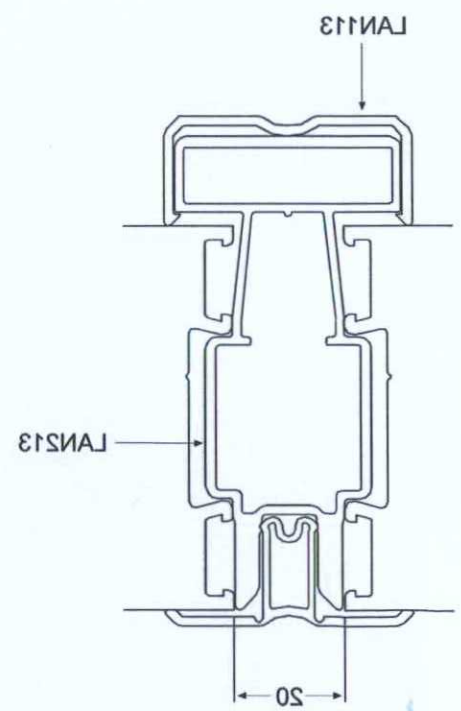

Heavy Duty Butt Joint

www.linear.co.uk 01332 883 900

joint assemblies

variable joints

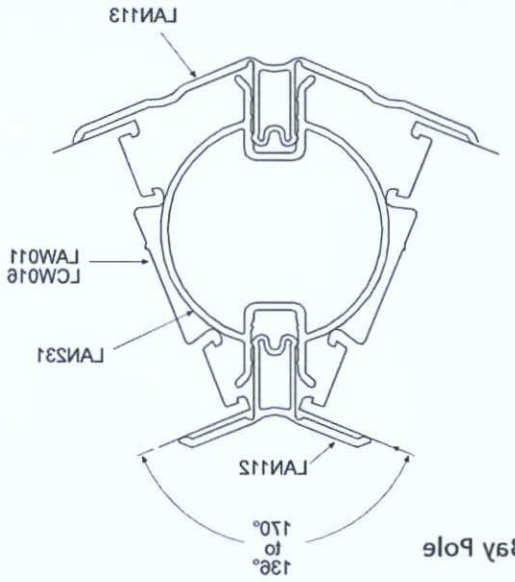

Small Bay Pole

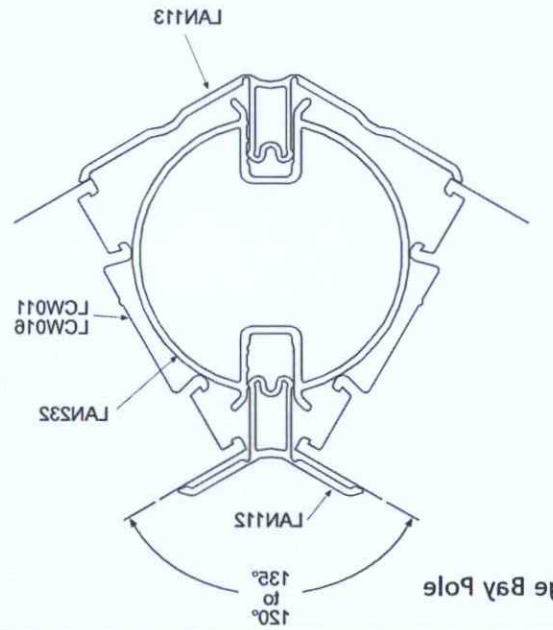

Large Bay Pole

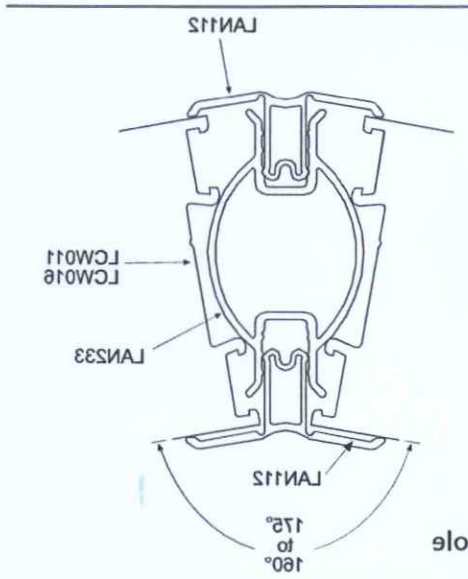

Bow Pole

joint assemblies

4.3 fixed joints

90° Corner Post

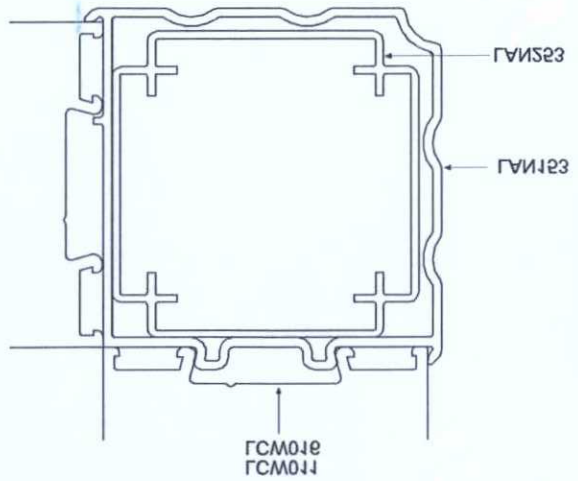

150° Corner Joint

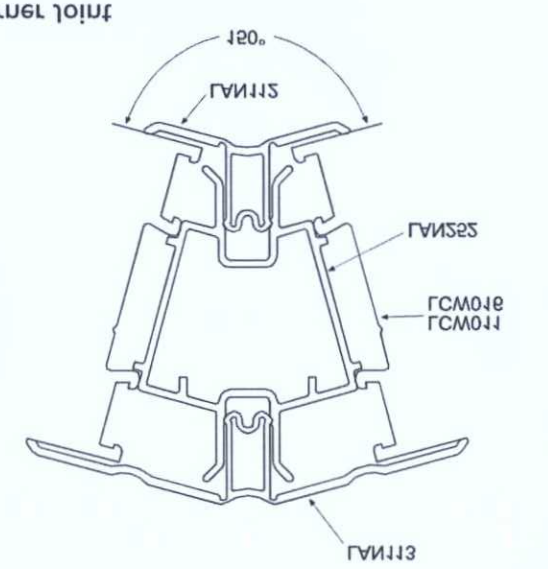

135° Corner Joint

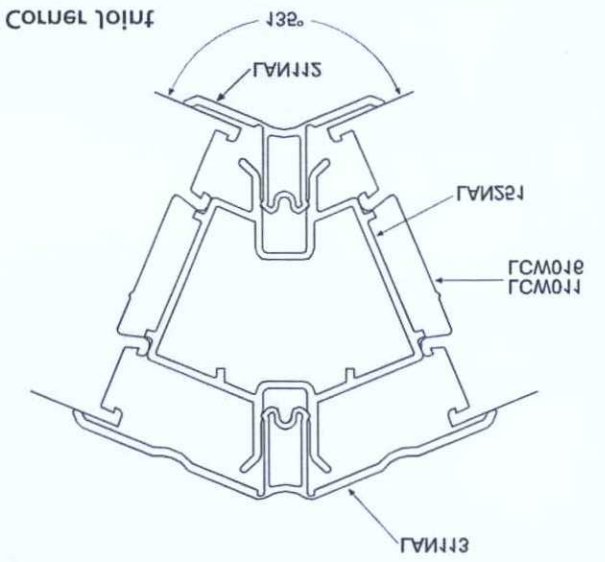

wind loading

section 5.1

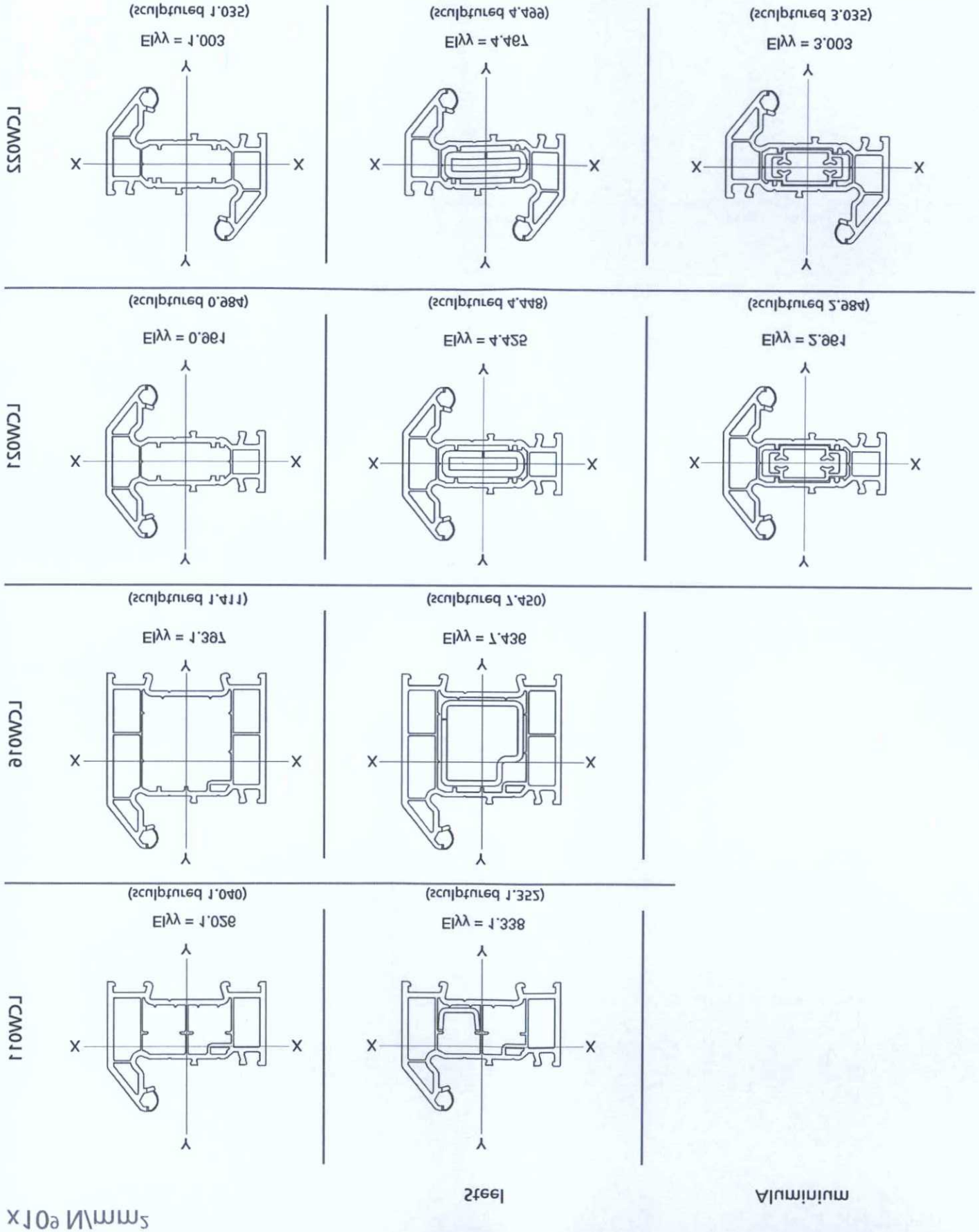

$x10^6$ N/mm^2

x10⁹ N/mm²

Steel

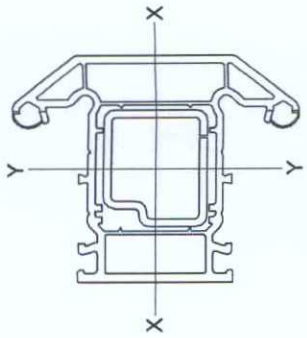

EIy = 6.691
(sculptured 6.655)

LCW031

EIy = 1.070
(sculptured 1.095)

LCW035

EIy = 4.593

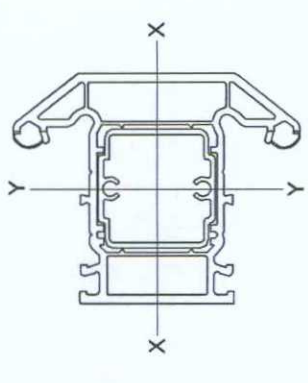

EIy = 1.395
(sculptured 1.420)

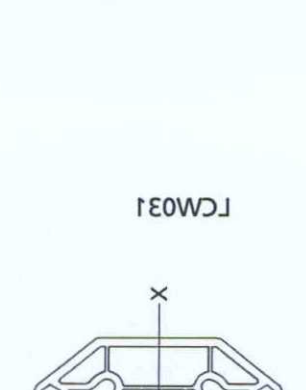

EIy = 1.112

LCW032

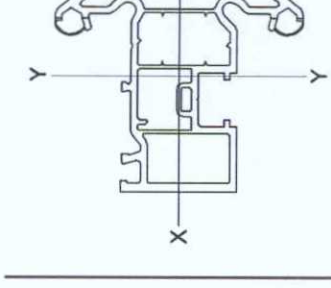

EIy = 1.346

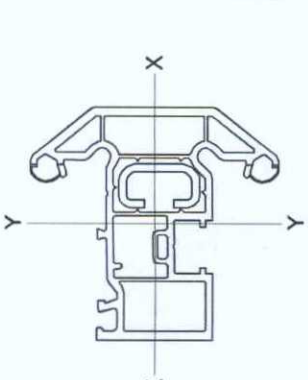

EIy = 1.437
(sculptured 1.461)

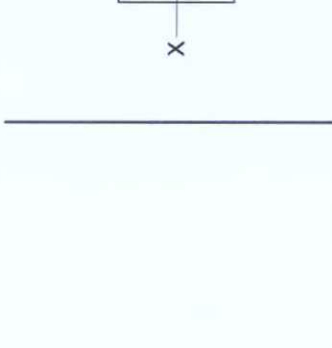

EIy = 5.932
(sculptured 5.958)

Aluminium

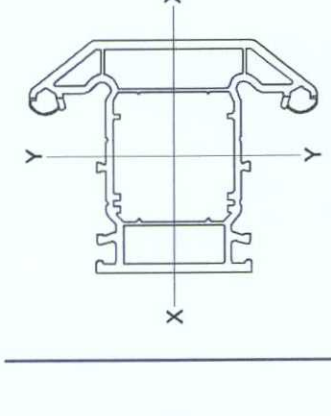

EIy = 1.724
(sculptured 1.748)

LCW026

EIy = 1.300
(sculptured 1.324)

EIy = 1.356
(sculptured 1.367)

LCW027

EIy = 1.832
(sculptured 1.858)

LCW029

x10⁹ N/mm²

Steel

LCM03S

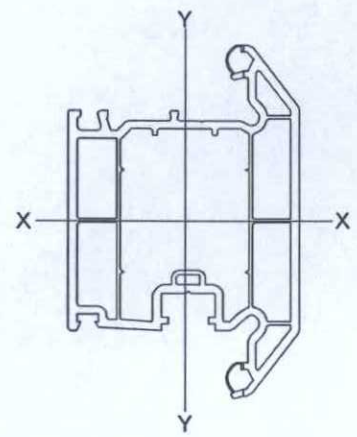

EIyy = 1.703
(sculptured 1.818)

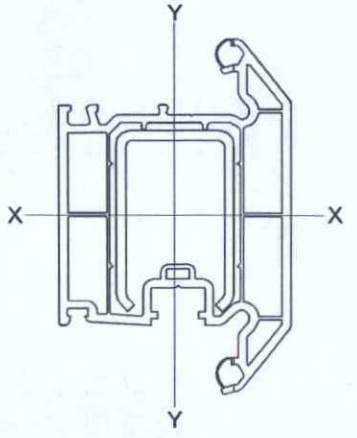

EIyy = 12.023
(sculptured 12.138)

LCM03J

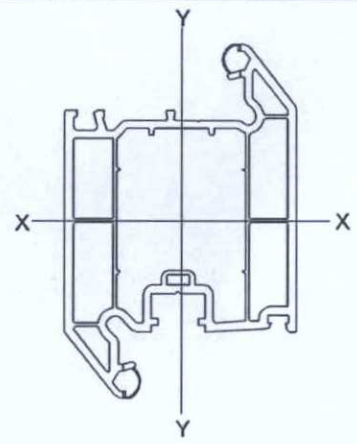

EIyy = 1.739
(sculptured 1.885)

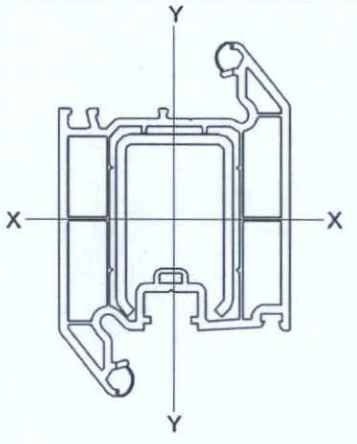

EIyy = 12.059
(sculptured 12.205)

www.liniar.co.uk

01332 883 900

x10⁹ N/mm²

Steel

LAN11

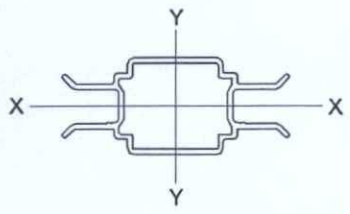

EIyy = 8.008

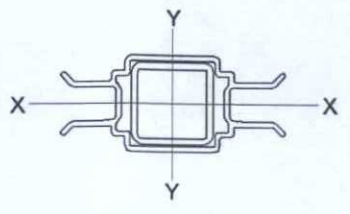

EIyy = 11.325

LAN12

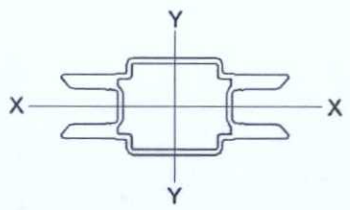

EIyy = 14.820

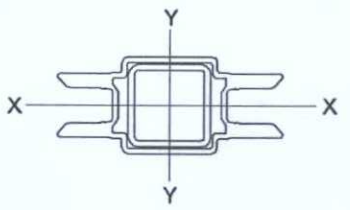

EIyy = 18.137

LAN13

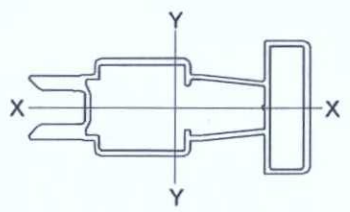

EIyy = 31.365

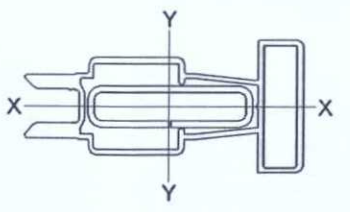

EIyy = 43.251

Load Bearing of Joint Profiles

The following 'Load Tables' have been calculated in accordance with BPF Code of Practice for the Survey and Installation of White High Impact PVCu Windows, and are only applicable for those joint profiles restrained at their centre, for example by means of adjacent windows.

The 'Load Tables' must not be applied to those joint profiles used in isolation.

These tables should be used for guidance only.

N/A - Joint profile is NOT suitable for load bearing situations at this length and above.

Consult - Joint profile is suitable for load bearing situations at this length and above. Consult the Linier Design Office.

x10⁹ N/mm²

LAN251

EIx = 8.797

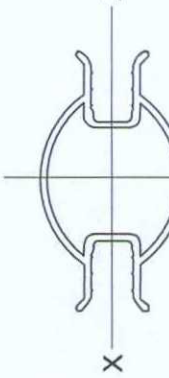

LAN252

EIx = 8.792



LAN231

EIx = 6.878

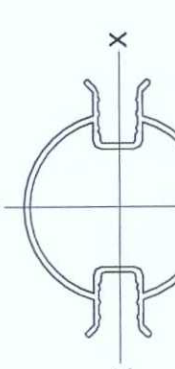

LAN232

EIx = 13.118

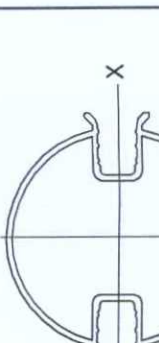

LAN233

EIy = 6.750

LAN253

EIy = 19.079

www.linier.co.uk 01332 883 900

load bearing capacity



LAN211

Can be used with Butt Joint
Jack LAN311

length	Load
mm	tonnes
500	2.49
600	2.34
700	2.24
800	2.16
900	2.04
1000	1.92
1100	1.79
1200	1.62
1300	1.38
1400	1.18
1500	1.06
1600	0.94
1700	0.83
1800	N/A



LAN212

Can be used with Butt Joint
Jack LAN311

length	Load
mm	tonnes
500	3.60
600	3.43
700	3.23
800	3.13
900	2.91
1000	2.72
1100	2.54
1200	2.16
1300	1.85
1400	1.61
1500	1.43
1600	1.24
1700	1.09
1800	N/A

load bearing capacity

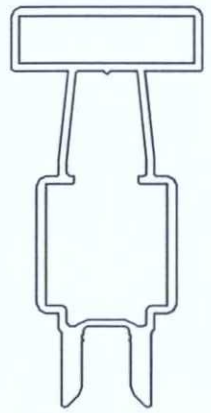

LAN213

Can be used with Butt Joint
Jack LAN311

length	Load
mm	tonnes
500	4.37
600	4.23
700	4.05
800	3.83
900	3.68
1000	3.53
1100	3.35
1200	3.17
1300	2.98
1400	2.62
1500	2.30
1600	2.01
1700	1.82
1800	1.63
1900	1.46
2000	1.30
2100	1.16
2200	N/A

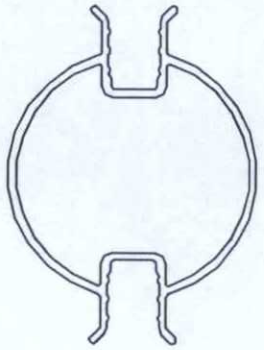

LAN231

Can be used with Small Bay Pole
Jack LAN331

length	Load
mm	tonnes
500	2.99
600	2.91
700	2.83
800	2.76
900	2.67
1000	2.56
1100	2.47
1200	2.35
1300	2.33
1400	2.23
1500	2.15
1600	2.06
1700	1.96
1800	1.80
1900	1.63
2000	1.48
2100	1.34
2200	Consult

www.linlar.co.uk 01332 883 900

load bearing capacity

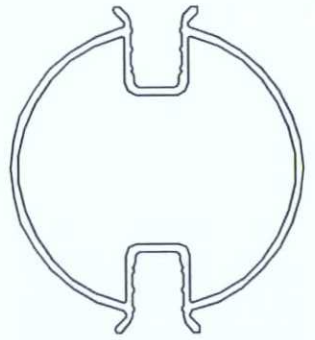

LAN232

Can be used with Large Bay Pole
Jack LAN332

length	load
mm	tonnes
500	3.53
600	3.45
700	3.37
800	3.29
900	3.22
1000	3.16
1100	3.08
1200	2.98
1300	2.88
1400	2.81
1500	2.74
1600	2.67
1700	2.59
1800	2.51
1900	2.43
2000	2.35
2100	2.27
2200	Consult

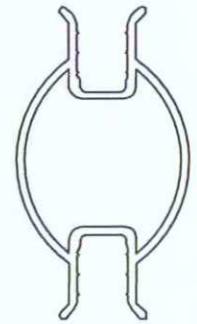

LAN233

Can be used with Butt Joint
Jack LAN311

length	load
mm	tonnes
500	2.40
600	2.31
700	2.18
800	2.07
900	1.98
1000	1.87
1100	1.77
1200	1.64
1300	1.42
1400	1.23
1500	1.07
1600	0.96
1700	0.85
1800	NA

load bearing capacity

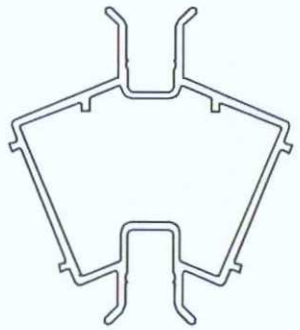

LAN251

Can be used with Butt Joint
Jack LAN311

length	load
mm	tonnes
500	3.40
600	3.31
700	3.21
800	3.14
900	3.07
1000	2.96
1100	2.85
1200	2.75
1300	2.68
1400	2.60
1500	2.50
1600	2.41
1700	2.32
1800	2.23
1900	2.05
2000	1.87
2100	1.67
2200	Consult

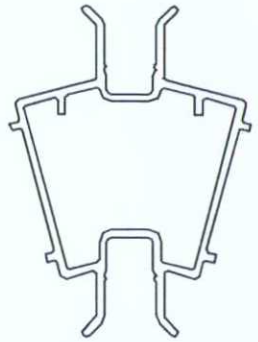

LAN252

Can be used with Butt Joint
Jack LAN311

length	load
mm	tonnes
500	3.08
600	2.98
700	2.90
800	2.79
900	2.67
1000	2.57
1100	2.48
1200	2.38
1300	2.30
1400	2.17
1500	2.07
1600	1.87
1700	1.66
1800	1.49
1900	1.34
2000	1.23
2100	1.13
2200	Consult

load bearing capacity

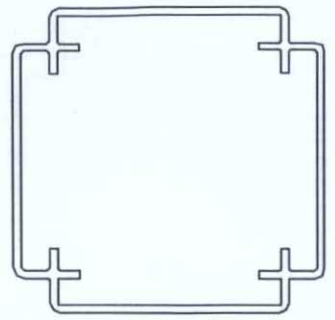

LAN253

Can be used with Square Pole
Jack LAN353

Length mm	**Load** tonnes
500	4.00
600	3.94
700	3.87
800	3.80
900	3.74
1000	3.67
1100	3.61
1200	3.55
1300	3.50
1400	3.44
1500	3.37
1600	3.29
1700	3.21
1800	3.13
1900	3.08
2000	3.03
2100	2.98
2200	Consult

energy ratings

Operated by the BFRC (British Fenestration Ratings Council), Window Energy Ratings (WER's), are a straight forward way of assessing the thermal efficience of window systems.

The rating system is recognised and referred to in Part L of The Building Regulations.

WER's are calculated using a standard size and style of window and a formula taking into account solar gain and air leakage, amongst other factors. The resulting numerical value falls into lettered bands A to G, A being the most efficient. These lettered bands being familiar sights on white goods such as refrigeratators, indicating the efficiency of the product.

As all calculations are based on the exact same window, the resulting values are directly comparable between window systems.

The benefits of installing the most efficient windows in both new build and refurbish properties are obvious, reducing heating bills and reducing carbon emissions.

Whilst some manufacturers of ageing systems are forced into ever increasing levels of complexity and expense to ensure their products achieve acceptable ratings, Linlar products have been designed using the latest software to make the most efficient use of materials.

For more information on WER's visit **www.bfrc.org**

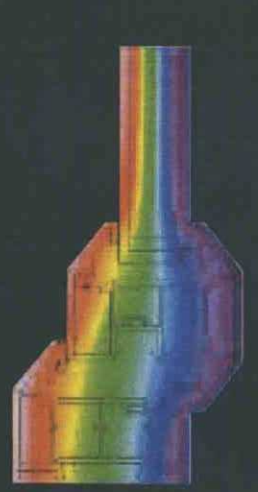

Thermal transfer through Linlar 'A Rated' sash/outer frame

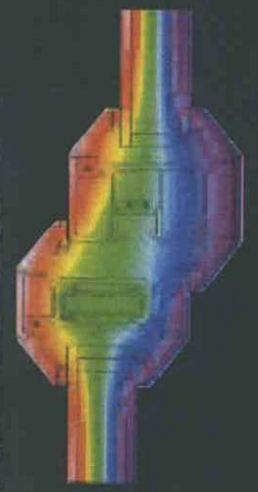

Thermal transfer through Linlar 'A Rated' sash/transom



Thermal transfer through Linlar 'A Rated' outer frame

energy ratings

The Linear Window System for the Energy Conscious

- The following BFRC Window Energy Ratings (WER's) have been calculated by a registered independent simulator.
- Simulations carried out on windows manufactured in accordance with The Linear Fabrication Manual and identical to those submitted for BS7950 accreditation.
- The Linear Window System features a 57mm high Outer Frame, ideal for internal glazing.
- For more information on Window Energy Ratings visit www.bfrc.org.

Internal pane	External pane	Spacer Bar	28 DGU Gas	BFRC Rating
Planitherm Total	Float	Generic Aluminium	Argon	C
Pilkington K	Optifloat	Swiss Spacer V	Air	C
Planitherm Total	Diamant	Generic Aluminium	Air	C
Pilkington K	Optifloat	Super Spacer	Air	C
Pilkington K	Optifloat	Super Spacer	Air	B
Climaguard D	Float	Super Spacer	Argon	B
Planitherm Total	Diamant	Generic Aluminium	Argon	B
Pilkington K	Optifloat	Super Spacer	Argon	B
Climaguard A	Float	Super Spacer	Argon	A
Pilkington K	Optiwhite	Super Spacer	Argon	A
Planitherm Total	Float	Super Spacer	Argon	A
Planitherm Total	Diamant	Swiss Spacer V	Argon	A

Or how about the pinnacle of energy efficient windows:

Planitherm Total	Diamant	Super Spacer	Argon	A+8

Does your system supplier offer you all of this, along with:

- High gloss, lead free profiles.
- No internal corner cleaning required, thanks to the double-action gasket (Patent UK 0802551.2).
- Typically, less than half the steel requirement of established systems.
- Part M compliant & standard low threshold door options available, with no end milling required to the frame (Registered Design UK 4006283).
- BS7950, Pas 23/24, EN12608, Secured By Design & tested to the requirements of BS7412.
- Choice of chamfered & sculptured systems, fully interchangeable for ease of manufacture. Available September '08.
- Identical chamfered bead & rebate detail, ideal for internal glazing.
- Symmetrical drainage for rebate & bead areas, on all profiles.
- 165mm flush fitting clip on cill, in addition to the standard range.
- Equal frame cover on both faces of door sashes.
- Internally & externally beaded sash windows accept 22mm backset hardware, with night vent facility.
- Snap-on stacking of cill, outer frames, low thresholds & frame extension.
- Comprehensive range of ancillary products.
- Available in white, rosewood & oak finishes, along with foiled on white options.

notes