General Notes:

Do not scale dimensions from this drawing, unless for Planning purposes.

The Contractor is responsible for checking all dimensions on site prior to commencement of the works.

This drawing is to be read in conjuction with the specification.

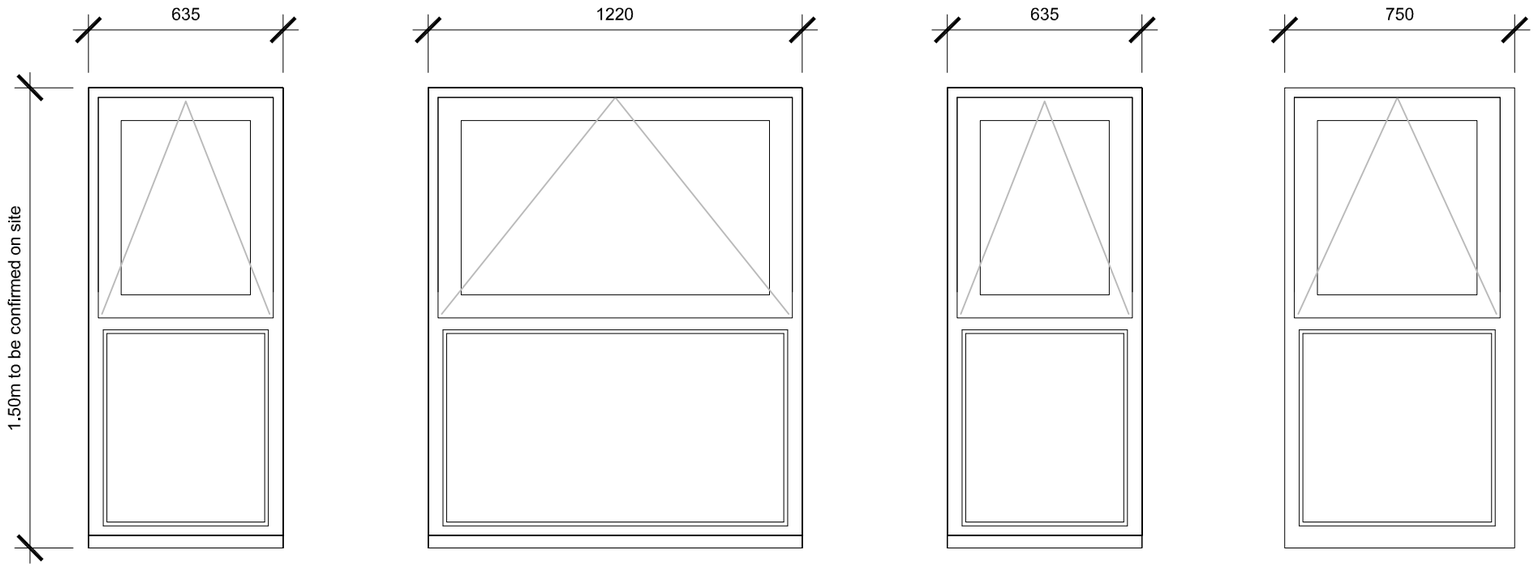

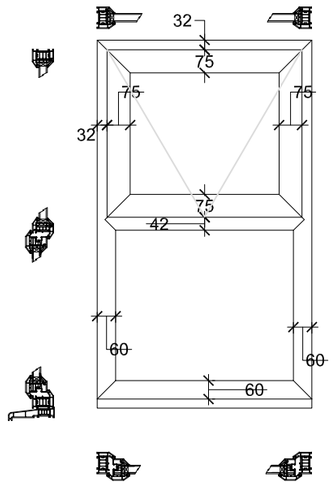

Standard Detail for PVC Double glazed windows.

W1 W2 W3 W4

Existing PVC Casement windows
Flat 7

Brian Elstone Surveying Services Ltd
Brian Elstone, MCIOB, IMaPS, FCABE
Building Surveyor and Architectural Consultant
CDM Consultant
1 Herne Court, Station Road, Rustington,
West Sussex, BN16 3BQ
Phone: 01903 784884, Mobile: 07710 593021.
Email: brian@elstone.biz

Client:
Mr P. Pazoscasal, Flat 7, 112 Marine Parade, Worthing, BN11 3QG

Project:
Replacement windows to Front Elevation.

Drawing Title:
Existing Windows - Flat 7

Revision	Date	Description

Scale:	Date:	Drawn By:
1:20	02/08/2024	BE

Drawing Number:	Revision:
1663/002	-