Discharge of Condition submission

Condition 10 - Parking Areas

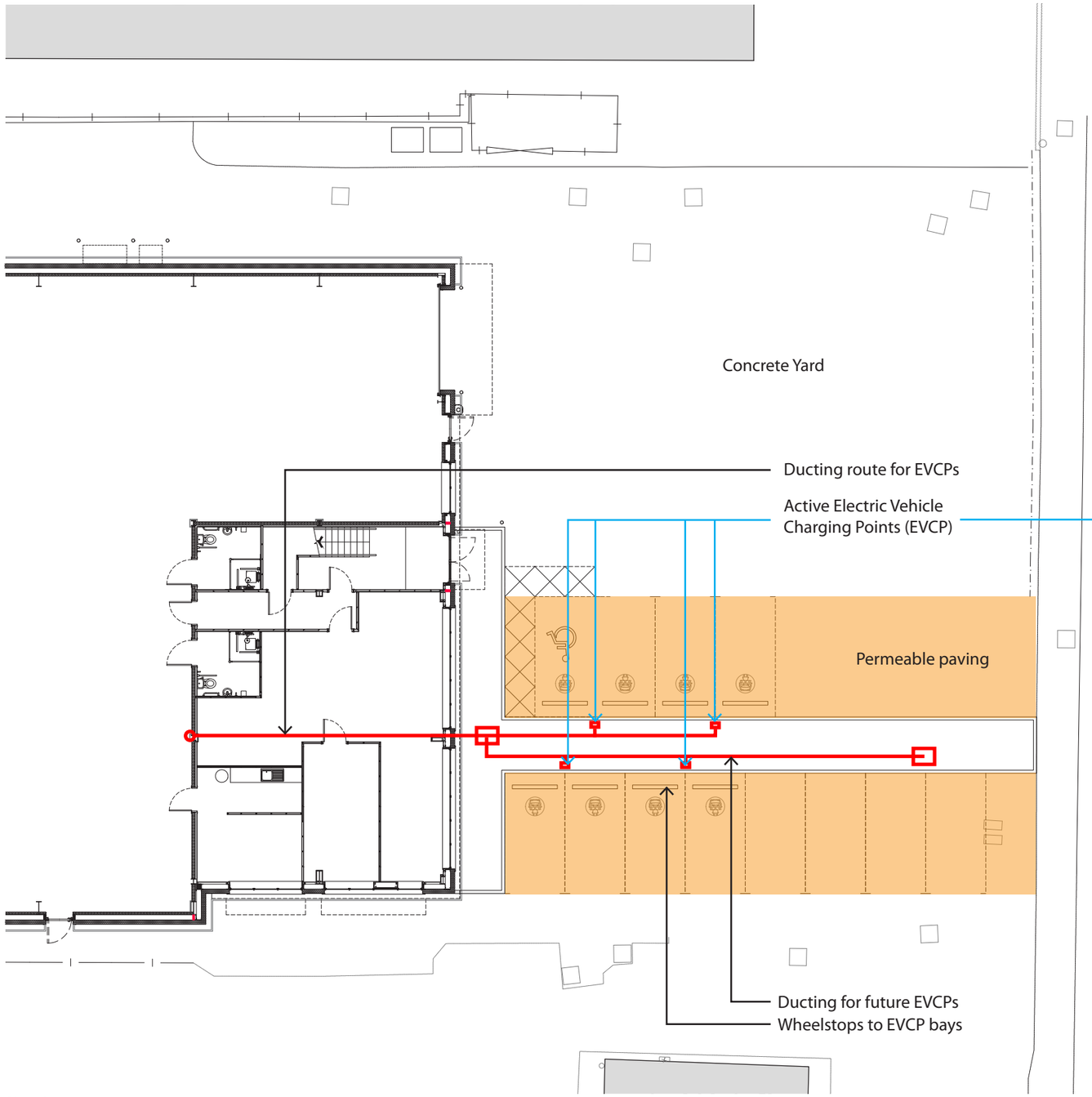

Site plan



4No. EVCPs serving 8No. parking spaces
- 7.2kW capacity
- Intelligent EV Twin Pedestal Charger 2x 7kw AC ICSW7CPT

Ducting installed for remaining spaces

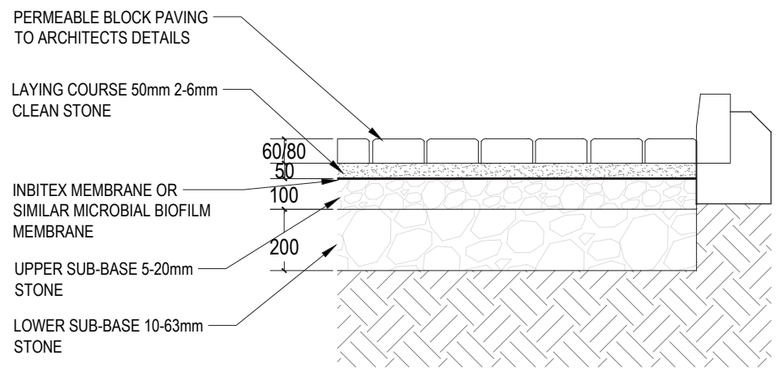

Permeable paving detail