Technical details of new windows for Flat C Norwich Court BN11 5PG
(First floor) (Amended 21/04/2023)

QUOTATION

NATIONAL PLASTICS CHICHESTER
UNIT 1D
PORTFIELD TRADE CENTRE
65-68 BOGNOR ROAD
CHICHESTER
WEST SUSSEX
PO19 8NS
FAX :

YOUR REF : ian vass/pevensey
OUR REF : 3291
JOB SPEC : Glazed
DATE : 7-Feb-23

1 — 1 off — FS Casement — O/A Dim 2385mm x 1490mm — lounge

White — Style FF

WINDOW A - LOUNGE

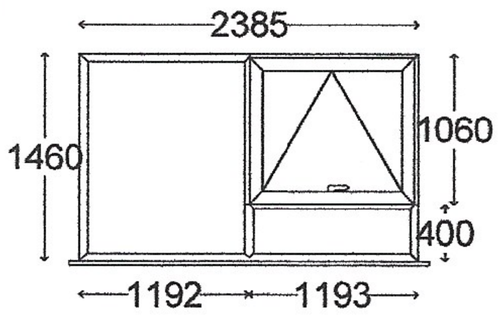

	Quantity	*Price*
Frame Price	1	**£127.10**
Glass	1	**£135.61**
64mm T/Z (FS)	1.193 m	**£10.17**
64mm T/Z (FS)	1.490 m	**£12.71**
70mm FS Case Sash	1	**£35.68**
Yale Shoot Bolts	1	**£14.50**
70mm Corner Protectors	1	**£0.46**
150mm Cill (White)	2.535 m	**£19.08**
Total		**£355.31**

Frame (Head) - 101.160 56mm Outerfr
Frame (Right ja - 101.160 56mm Outerfr
Sash - 103.264 75mm T Sash(
Drainage - Concealed/Base
Cill colour - White
Add-on (Head) - No add-on
Add-on (Right j - No add-on
Ventilator (Gla - No ventilator
asement Handl - Std Inline Locking
Glazing thickne - 28mm

Frame (Cill) - 101.160 56mm Outerfr
Transom - 102.261/260 64mm Sec
Bead type - Sculptured (28mm)
Colour - White
Open in/out - Open out
Add-on (Cill) - No add-on
Ventilator (Hea - No ventilator
Ventilator (Fra - No ventilator
asement lockin - Shootbolt Locking
Hinge Protector - NA

rame (Left jam - 101.160 56mm Outerfr
Mullion - 102.261/260 64mm Sec
Cill - 110.103 150mm Cill
Sash colour - White
Reinforcing rul - Std System Reinforcing
Add-on (Left ja - No add-on
Ventilator (Sas - No ventilator
Handle - White
Friction stay - Std 58 - 70fs - S10 Stay

E8 4-20-4 Clear Float/ Softcoat . Argon Gas 20mm Blk Warmedge (1133 x 340)
A1 4-20-4 Clear Float/ Softcoat . Argon Gas 20mm Blk Warmedge (1132 x 1376)
E1 4-20-4 Clear Float/ Softcoat . Argon Gas 20mm Blk Warmedge (1038 x 905)

2 — 1 off — FS Casement — O/A Dim 1185mm x 1045mm — kitchen

White — 2

WINDOW B - KITCHEN

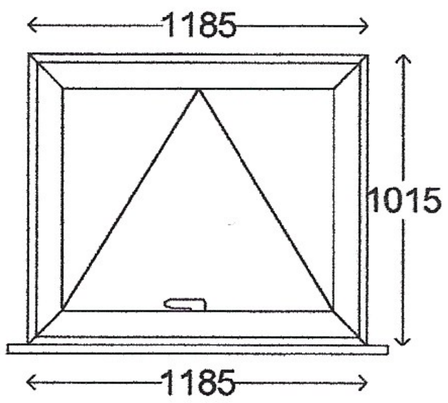

	Quantity	*Price*
Frame Price	1	**£46.52**
Glass	1	**£39.57**
70mm FS Case Sash	1	**£35.68**
Yale Shoot Bolts	1	**£14.50**
70mm Corner Protectors	1	**£0.46**
150mm Cill (White)	1.335 m	**£10.05**
Total		**£146.78**

Technical details of new windows for Flat C Norwich Court BN11 5PG
(First floor) (Amended 21/04/2023)

QUOTATION

NATIONAL PLASTICS CHICHESTER
UNIT 1D
PORTFIELD TRADE CENTRE
65-68 BOGNOR ROAD
CHICHESTER
WEST SUSSEX
PO19 8NS
FAX :

YOUR REF : ian vass/pevensey
OUR REF : 3291
JOB SPEC : Glazed
DATE : 7-Feb-23

Frame (Head) - 101.160 56mm Outerfr	Frame (Cill) - 101.160 56mm Outerfr	rame (Left jam - 101.160 56mm Outerfr
Frame (Right ja - 101.160 56mm Outerfr	Sash - 103.264 75mm T Sash(	Bead type - Sculptured (28mm)
Cill - 110.103 150mm Cill	Drainage - Concealed/Base	Colour - White
Sash colour - White	Cill colour - White	Open in/out - Open out
Reinforcing rul - Std System Reinforcing	Add-on (Head) - No add-on	Add-on (Cill) - No add-on
Add-on (Left ja - No add-on	Add-on (Right j - No add-on	Ventilator (Hea - No ventilator
Ventilator (Sas - No ventilator	Ventilator (Gla - No ventilator	Ventilator (Fra - No ventilator
Handle - White	asement Handl - Std Inline Locking	asement lockin - Shootbolt Locking
Friction stay - Std 58 - 70fs - S10 Stay	Glazing thickne - 28mm	Hinge Protector - NA

A1 4-20-4 Clear Float/ Softcoat . Argon Gas 20mm Blk
Warmedge (1006 x 836)

3	1 off	FS Casement	O/A Dim 1790mm x 1040mm	bedroom
	White	22		

WINDOW C - BEDROOM

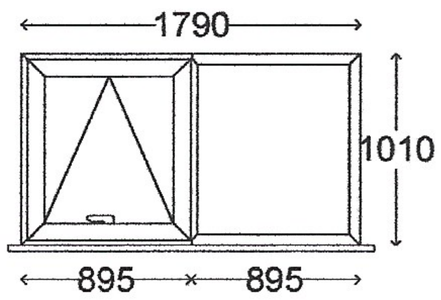

	Quantity	*Price*
Frame Price	1	**£70.36**
Glass	1	**£65.31**
64mm T/Z (FS)	1.040 m	**£8.87**
70mm FS Case Sash	1	**£35.68**
Yale Shoot Bolts	1	**£14.50**
70mm Corner Protectors	1	**£0.46**
150mm Cill (White)	1.940 m	**£14.60**
Total		**£209.78**

Frame (Head) - 101.160 56mm Outerfr	Frame (Cill) - 101.160 56mm Outerfr	rame (Left jam - 101.160 56mm Outerfr
Frame (Right ja - 101.160 56mm Outerfr	Mullion - 102.261/260 64mm Sec	Sash - 103.264 75mm T Sash(
Bead type - Sculptured (28mm)	Cill - 110.103 150mm Cill	Drainage - Concealed/Base
Colour - White	Sash colour - White	Cill colour - White
Open in/out - Open out	Reinforcing rul - Std System Reinforcing	Add-on (Head) - No add-on
Add-on (Cill) - No add-on	Add-on (Left ja - No add-on	Add-on (Right j - No add-on
Ventilator (Hea - No ventilator	Ventilator (Sas - No ventilator	Ventilator (Gla - No ventilator
Ventilator (Fra - No ventilator	Handle - White	asement Handl - Std Inline Locking
asement lockin - Shootbolt Locking	Friction stay - Std 58 - 70fs - S10 Stay	Glazing thickne - 28mm
Hinge Protector - NA		

A1 4-20-4 Clear Float/ Softcoat . Argon Gas 20mm Blk
Warmedge (740 x 831)
F1 4-20-4 Clear Float/ Softcoat . Argon Gas 20mm Blk
Warmedge (835 x 926)

Technical details of new windows for Flat C Notwich Court BN11 5PG (First floor) (Amended 21/04/2023)

QUOTATION

NATIONAL PLASTICS CHICHESTER
UNIT 1D
PORTFIELD TRADE CENTRE
65-68 BOGNOR ROAD
CHICHESTER
WEST SUSSEX
PO19 8NS
FAX :

YOUR REF : ian vass/pevensey
OUR REF : 3291
JOB SPEC : Glazed
DATE : 7-Feb-23

4	1 off	FS Casement	O/A Dim 1185mm x 890mm	bathroom
	White	2		

WINDOW D - BATHROOM

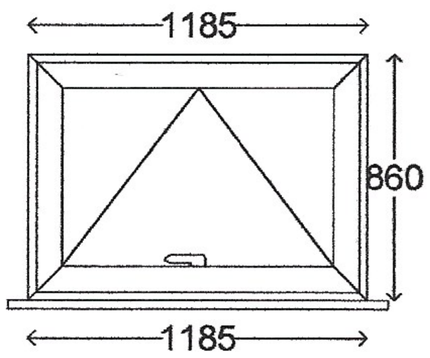

	Quantity	Price
Frame Price	1	**£43.13**
Glass	1	**£38.56**
70mm FS Case Sash	1	**£35.68**
Yale Shoot Bolts	1	**£14.50**
70mm Corner Protectors	1	**£0.46**
150mm Cill (White)	1.335 m	**£10.05**
Total		**£142.38**

Frame (Head) - 101.160 56mm Outerfr	Frame (Cill) - 101.160 56mm Outerfr	rame (Left jam - 101.160 56mm Outerfr
Frame (Right ja - 101.160 56mm Outerfr	Sash - 103.264 75mm T Sash(	Bead type - Sculptured (28mm)
Cill - 110.103 150mm Cill	Drainage - Concealed/Base	Colour - White
Sash colour - White	Cill colour - White	Open in/out - Open out
Reinforcing rul - Std System Reinforcing	Add-on (Head) - No add-on	Add-on (Cill) - No add-on
Add-on (Left ja - No add-on	Add-on (Right j - No add-on	Ventilator (Hea - No ventilator
Ventilator (Sas - No ventilator	Ventilator (Gla - No ventilator	Ventilator (Fra - No ventilator
Handle - White	asement Handl - Std Inline Locking	asement lockin - Shootbolt Locking
Friction stay - Std 58 - 70fs - S10 Stay	Glazing thickne - 28mm	Hinge Protector - NA

A1 4-20-4 Obs / Softcoat Contora . Argon Gas 20mm Blk
Warmedge (1006 x 681)

Extra Items	Quantity	Price

Total (Gross) £1,134.40	Total (Excl. VAT) £854.25	VAT @ 20.00% £170.85
		Total (Incl. VAT) £1,025.10
		Deposit Paid £0.00
		Balance Due £1025.10