General Notes:

Do not scale dimensions from this drawing, unless for Planning purposes.

The Contractor is responsible for checking all dimensions on site prior to commencement of the works.

This drawing is to be read in conjuction with the specification.

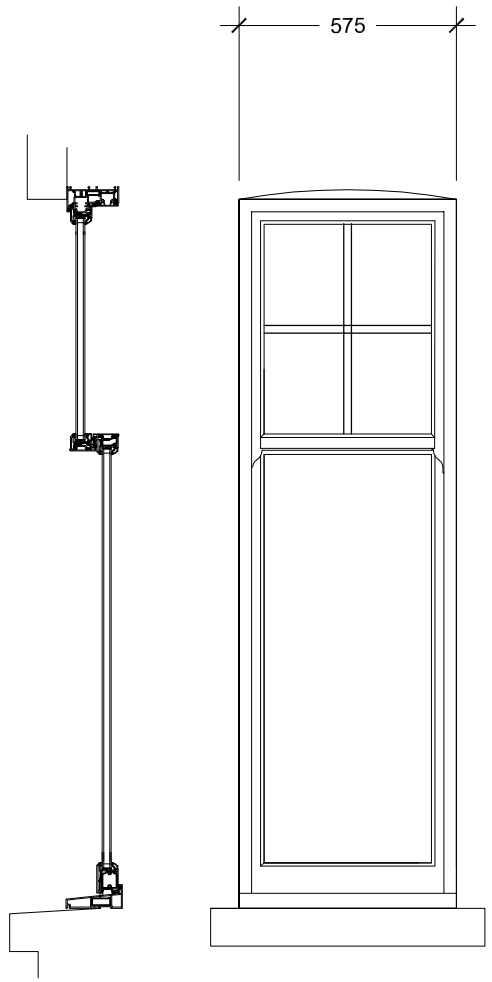

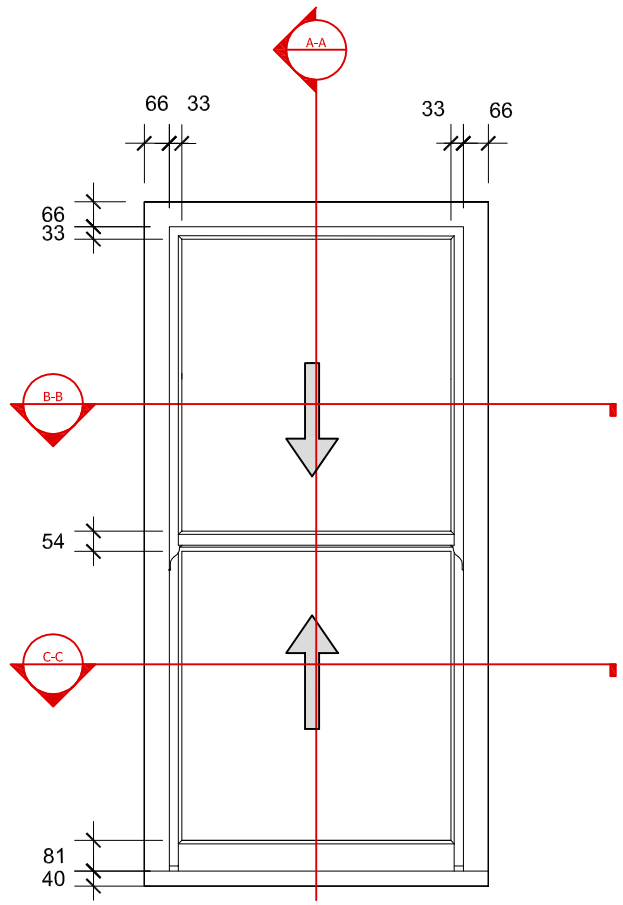

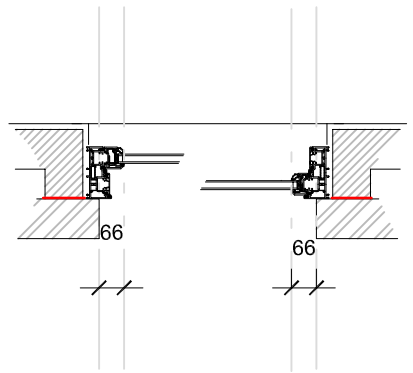

Profile dimensions for both windows the same

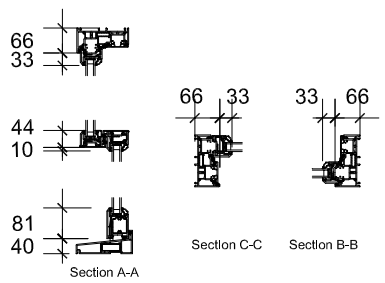

Legacy PVCu Vertical sliding sash Range with narrow profile sections set in masonry frame to match existing window profiles to front elevation. see drawings 1611 - 004 & 003

Revision	Date	Description
A	31/10/2023	Window name change

Brian Elstone Surveying Services Ltd
Brian Elstone, MCIOB, IMaPS, MCABE
Building Surveyor and Architectural Consultant
CDM Consultant

1 Herne Court, Station Road, Rustington,
West Sussex, BN16 3BQ
Phone: 01903 784884, Mobile: 07710 593021.
Email: brian@elstone.biz

Client:
Ms L. Lee, Flat 3 30 Mill Road, Worthing BN11 5DR

Project:
Window Replacement

Drawing Title:
PVC Window details

Scale:	Date:	Drawn By:
1:20	11/09/2023	BE

Drawing Number:	Revision:
1611-005	A