All dimensions to be verified on site.

This drawing has been produced for the specific client and project identified below and is not intended for use by any other person or for any other purpose.
© Sustainable Evolution Ltd

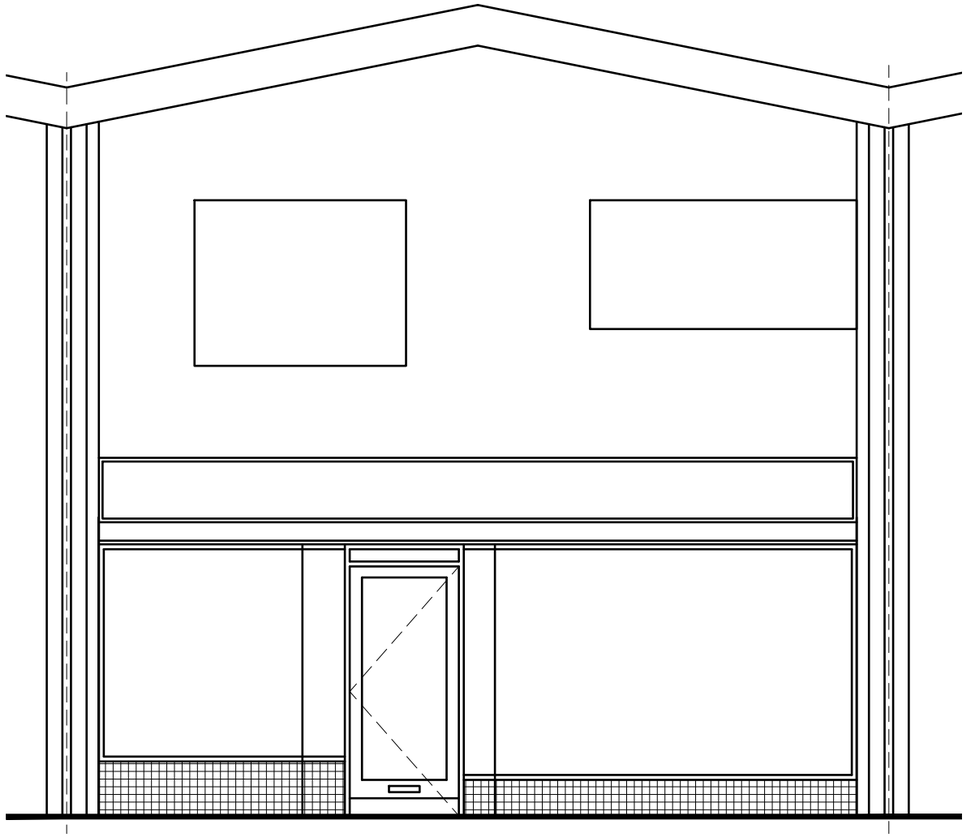

existing **elevation**

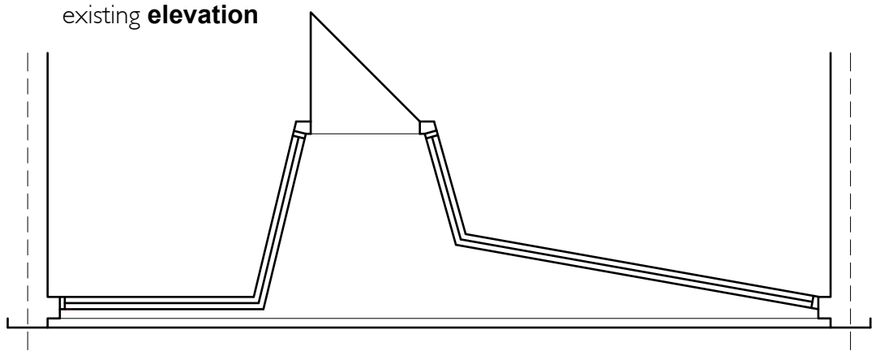

existing **shopfront plan**

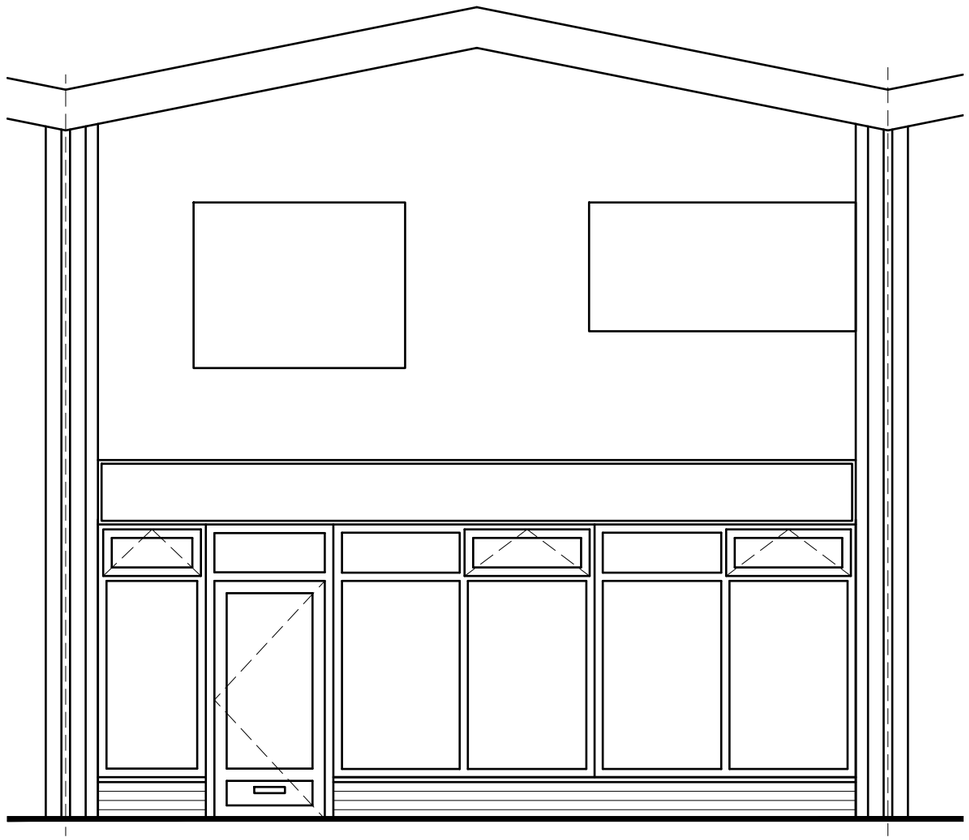

proposed **elevation**

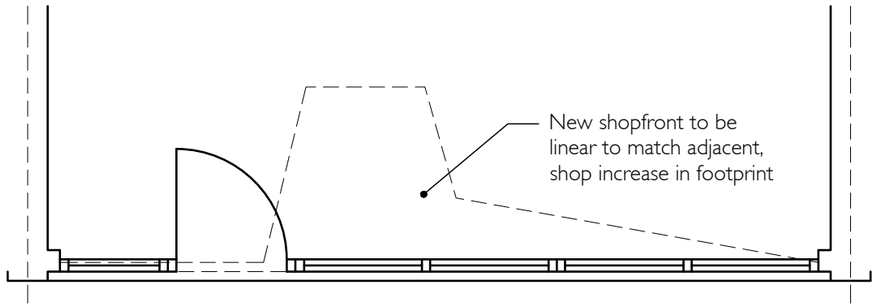

proposed **shopfront plan**

New entrance to shop to provide 775mm min clear opening in accordance with AD M2 Table 2

Rev	Revision details	Drwn	Chkd	Date
P2	Do not scale removed	rm		14.02.23

Evolution
Chartered Architects

Client
Bedr0ck Collective Ltd

Project
80 Manor Road
Lancing, BN15 0HD

Drawing
Existing and proposed elevation and shopfront plan

		DESIGN		FOR COMMENT	
Drawn		PLANNING	X	FOR INFORMATION	
Designed		BUILDING CONTROL		FOR APPROVAL	X
File ref.		TENDER		FOR MEASUREMENT	
Tel No.	01273 734064	CONSTRUCTION		FOR RECORD	

Drawing No	Scale @ A3	Rev
503 03	1:50	P2

0 1 2 3 4 5
METRES