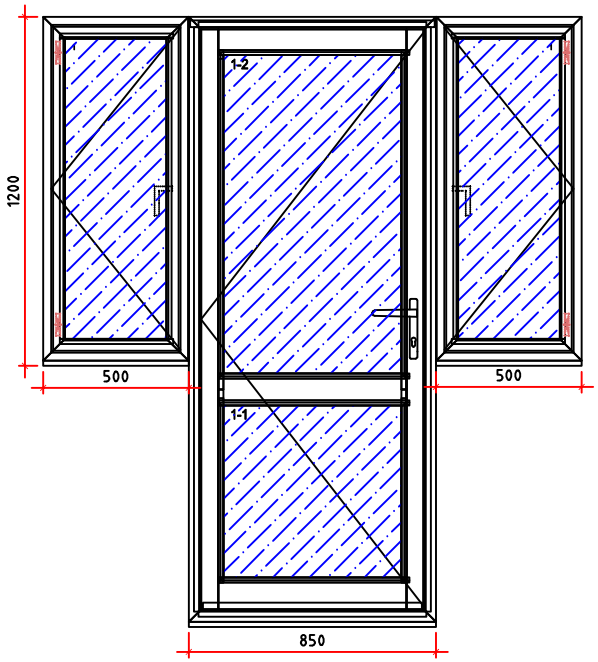

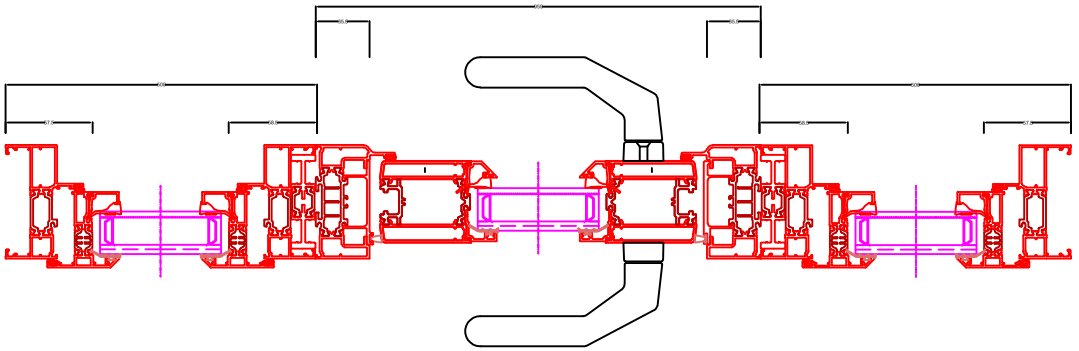

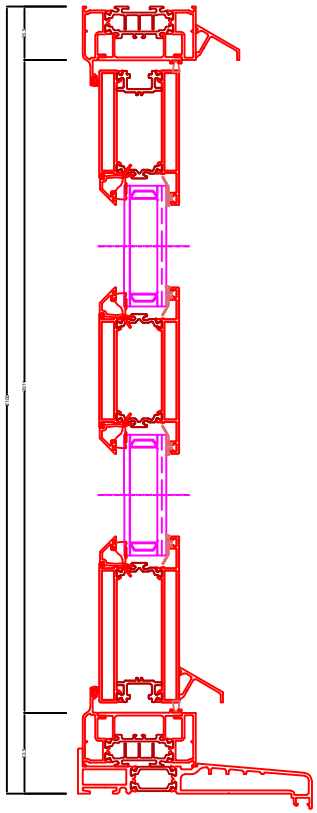

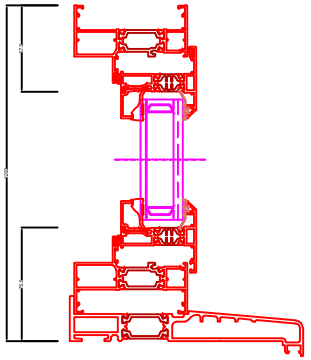

DOOR SPECIFICATION	
System	SAPA Crown Casement Window and Door
Threshold	Low level
Hinge Stiles	Standard
Lock Stiles	Standard
Lock	Multi-point Lock
Cylinder	Thumbturn Internal/Key Cylinder External
Handles	Lever/Lever Handle
Casement Hinges	Restrictor
Casement Locking	Espag Locking

GLAZING	
	6.4/18/4 Laminated Clear Glass. Warm edge spacer, argon, Low e

Colour	
	Standard RALColour

VIEWED FROM OUTSIDE

Revison No:	Description:
Date Revised:	
Revised By:	

Revison No:	Description:
Date Revised:	
Revised By:	

Revison No:	Description:
Date Revised:	
Revised By:	

Revison No:	Description:
Date Revised:	
Revised By:	

Customer:
United Living

Job No:

Project:
Culver Court,
Worthing

Title:
Proposed Aluminium Entrance Doors

Drawing Type:
Approval

Original Drawn By:
Ian Ramsey

Date:
10th March 2021

Scale:	Paper size:	Revision:
NTS	A4	

Drawing No:	Sheet No:
SYM16287	05

Tolerance: ± 0.3mm unless otherwise stated

Symphony
WINDOWS, DOORS & CONSERVATORIES LTD.

This drawing is the property of Symphony Windows and Doors Ltd and may not be copied, used or disclosed without written permission from the company. 14 Salamanca Road, Tharston Industrial Estate, Long Stratton, Norfolk, NR15 2PF

Tel: 01508 530004, Fax: 01508 530006