From:	Peter Barnett
Sent:	19 March 2013 16:15
To:	'teamp13@pins.gsi.gov.uk'
Cc:	'Simon Bareham'
Subject:	APP/Y3805/A/13/21922187
Attachments:	development control standard no 2.pdf; Internal Space Standards for New Homes.pdf; Adur District Local Plan chapter-09 (AH1 - AH12).pdf; Adur District Local Plan - Cover page.pdf; Adur District Local Plan - Forward.pdf; Adur District Local Plan - saved policies direction.pdf

Dear Mr Dunn

I have recently submitted the LPA Questionnaire and now enclose the required documents.

Most of the appeal documents can be found on the Council's website at the link below:

http://planning.adur-worthing.gov.uk/online-applications/simpleSearchResults.do;jsessionid=8DB4678E49B554A4400579F2B0C83E65?action=firstPage

Please click on the documents tab to view the documents.

I have attached the policy documents and relevant supplementary planning guidance to this email.

A list of conditions should the appeal be allowed will follow.

The plans considered in the determination of the application are as follows:

TA693/02
TA693/03
TA693/04
TA693/10A
TA693/11B
TA693/12B
TA693/13A
TA693/14A
TA693/15B
TA693/16
TA693/021 A

Please advise if there is any other information you require.

Regards

Peter Barnett

Peter Barnett - Principal Planning Officer, Development Management | Adur & Worthing Council Services
Location: Room 31, Civic Centre, Ham Road, Shoreham-by-Sea, West Sussex, BN43 6PR

Internal: 63233 | External: 01903 221310 | E-mail: peter.barnett@adur-worthing.gov.uk
Follow us on Facebook and Twitter - or search Adur and Worthing

Please think before you print this and save paper

Development Control Standard No.2

SPACE AROUND NEW DWELLINGS AND FLATS

ADUR
DISTRICT COUNCIL

Civic Centre
Ham Road
Shoreham by Sea
West Sussex BN43 6PR

Telephone : 01273 263222
Facsimile : 01273 263203

CHIEF EXECUTIVES DEPARTMENT

PETER DAVIES
Head of Planning and Policy

DEVELOPMENT CONTROL STANDARD NO. 2

SPACE AROUND NEW DWELLINGS AND FLATS

1. INTRODUCTION

2. RELATIONSHIP BETWEEN DWELLINGS/FLATS

3. AMENITY SPACE

4. ACCESS AND PARKING PROVISION

5. LANDSCAPING

APPENDIX - Standards for parking and servicing in relation to Residential Development.

1.0 INTRODUCTION

PURPOSE OF THE DEVELOPMENT CONTROL STANDARD

1.1 This development control standard is concerned with minimum standards for residential development. It is largely aimed at the provision of dwellinghouses and flats on small infill and redevelopment sites. However, new estate developments would also usually be expected to comply, although the Council may wish to prepare a design brief for larger sites and estate layouts may raise issues beyond the scope of this standard.

POLICIES AND OBJECTIVES

1.2 Relevant Government advice is in Planning Policy Guidance PPG1 "General Policy and Principles" and PPG3 "Housing".

1.3 The West Sussex County Structure Plan (approved by the Secretary of State in l993) sets the overall policy framework and contains a number of relevant policies. It emphasises the primary importance of protecting and improving the urban environment and resisting overintensive and damaging development (policies G1, G7 and B1); requires adequate provision for new housebuilding (G2), setting new dwelling numbers for each District (H1) and encouraging the provision of small dwellings for single persons, small families and the elderly subject to the need for a local mix of dwelling types and sympathy with existing housing in the vicinity (H3) and dwellings for those least able to compete in the existing housing market (H5); and requires adequate access and parking (T14). Policies of particular relevance to this Standard are G5, which states that development will be required to meet high standards of design, construction and layout sympathetic to and in scale with its surroundings; and B2 aims to prevent "town cramming" and states that infill and redevelopment in defined built-up areas will normally be permitted subject to not detracting from the environmental quality of established urban areas and with particular regard to whether height, massing, site coverage or parking for new buildings would diminish unacceptably the amenity or privacy enjoyed by existing occupants, whether a satisfactory environment would be created for residents of new houses, and the effect on attractive trees and areas or urban open space valuable for amenity, recreation and wildlife.

The Structure Plan is being reviewed, and a Draft Plan was placed on statutory deposit in November 2001.

1.4 The Adur District Local Plan 1996 defines the boundary of the built-up area and develops the housing requirements of the Structure Plan (in policies AH1, 3, 5 and 6). It also contains detailed policies for safeguarding specific areas or features such as Conservation Areas (AB4), Listed Buildings (AB7 - 11), buildings of townscape merit (AB12), amenity open space (AB22) and trees (AB25), as well as requirements for access and parking (AT12 and 13), and in certain cases, for landscaping and tree planting (AB26 and 27), noise insulation from certain road, railway and aircraft noise (AP8), or archaeological features (AB1).

1.5 Of particular relevance is **Policy AH2** which, in effect, sets the objectives of this Standard. It states:-

New residential development by way of infilling or redevelopment will be acceptable in the built-up area, providing the site is not allocated for any other purpose in this Local Plan. Any proposal will be expected to be designed so that:-

(a) its appearance, character and scale create a pleasant place in which to live and is in keeping with and enhances the existing local environment with particular attention being paid to the architectural form, height, materials, density and layout of both buildings and associated structures and hard-surfaced areas;

(b) it respects the existing natural features of the site, including land form and trees;

(c) it does not have an unneighbourly effect on existing dwellings by reason of unacceptable loss of privacy, daylight/sunlight, outlook or open amenity space;

(d) it incorporates adequate standards of residential amenity for the new dwelling(s) in terms of open amenity space, daylight/sunlight, outlook and privacy.

(e) access arrangements to the public highway and on-site parking arrangements are acceptable under Policy AT12; and

(f) it accords with the standards adopted by the District Planning Authority.

BUILDING REGULATIONS

1.6 It should be noted that the Building Regulations govern minimum health and safety standards of new developments and these requirements will need to be met in any new development. Queries on this matter should be directed to the Building Control Section of the Planning and Policy Division.

2.0 RELATIONSHIP BETWEEN DWELLINGS/FLATS

2.1 The space around and between dwellings/flats is an important factor in the creation of a pleasant residential environment, contributing to the individual character, identity and appearance of an area. It is also important to ensure the provision of adequate privacy and daylight to individual dwellings/flats. In infill and redevelopment schemes new buildings should respect the existing character and appearance of an area and ensure the retention of adequate privacy for and daylight to existing dwellings/flats.

2.2 The use of density as a criteria for controlling developments is considered to be very crude and will not in itself ensure a good quality of residential environment. It is considered that generally the specific requirements of a site will usually determine the acceptable density.

2.3 Residential developments, in order to prevent over-developed layouts, should not have an excessive overall site coverage of buildings and hard surfaced areas .

2.4 The space required between buildings is affected by the location of principal windows and the need to maintain privacy between facing windows and allow light to enter such windows. A distance of 22m is the minimum required between facing principal windows in order to retain sufficient privacy. For developments over 2 storeys in height this distance will need to be increased.

2.5 Where a principal window faces a solid obstruction a distance of 11m is required between the window and a single-storey structure or 14m between a principal window and a two-storey structure, in order to allow adequate light to enter the windows. In the case of flats, developments should be avoided which include flats with only north-facing windows since these would not benefit from any direct sunlight.

2.6 Elevations with no principal windows should be set back at least 1m from a site boundary to allow access for maintenance and to avoid a cramped appearance.

2.7 The requirements considered above can be applied to the location of a dwelling/flat in relation to its side, rear and front boundaries.

SIDE BOUNDARIES

2.8 In the case of small detached, semi-detached and end-of-terrace dwellings a minimum gap of 1m should be provided between any wall of the dwelling and the side boundary. However, on a corner plot and in the case of large detached or semi-detached houses (over 10m wide or more than two-storeys high) and blocks of flats, a gap of at least 2m will be required in order to avoid a cramped appearance. An exception may be made in the case of linked semi-detached dwellings where pairs of houses are linked by a pair of garages. Detached garages to the side of a dwelling may also be acceptable abutting the boundary, but preferably should still leave a gap of at least 1m between the dwelling and the garage to provide access to the rear garden.

Side Boundaries

A minimum gap of 1m should be provided on the side boundary.
But for larger houses and flats a minimum of 2m will be required.

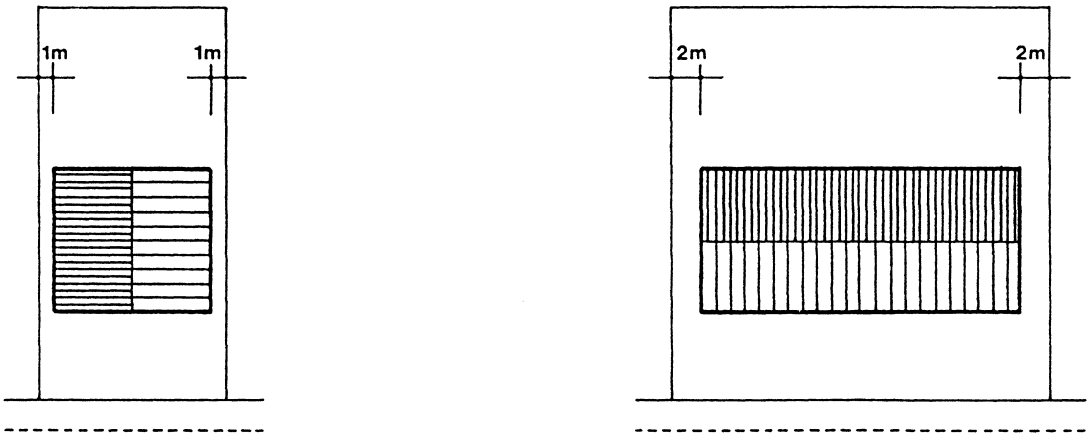

REAR BOUNDARIES

2.9 The acceptable distance between the rear of buildings is governed mainly by the distance required to give adequate privacy between facing principal windows, which is 22m in the case of 2 storey developments. However, houses or bungalows should preferably be designed so as to allow for the possibility of future extensions constructed under the provisions of the General Permitted Development Order 1995 as "permitted development". Therefore, whilst the minimum distance between the rear of one or two-storey dwellings is 22m, "permitted development" rights for two-storey rear extensions and roof extensions to houses will be removed by condition unless there is at least 28m between the rear walls (which would be sufficient to allow for small extensions).

Rear Boundaries

The minimum distance between the rear of one or two-storey dwellings is 22m.

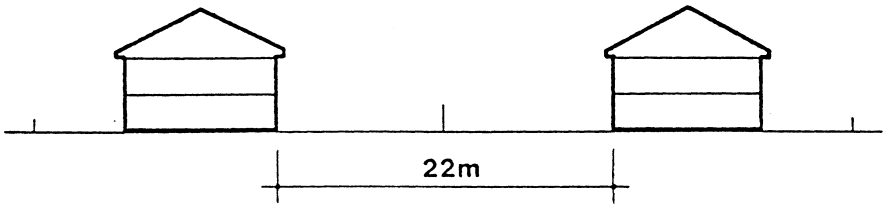

2.10 A distance of 22m is considered sufficient between 2 storey blocks of flats (which have no "permitted development" rights) but in the case of three-storey houses or flats a distance of 28m would be required. Where a one or two-storey building backs onto a three-storey building a space of 28m would also be required. Higher buildings would need to be considered on their merits.

Rear Boundaries

The minimum distance between the rear of three-storey houses or flats is 28m.

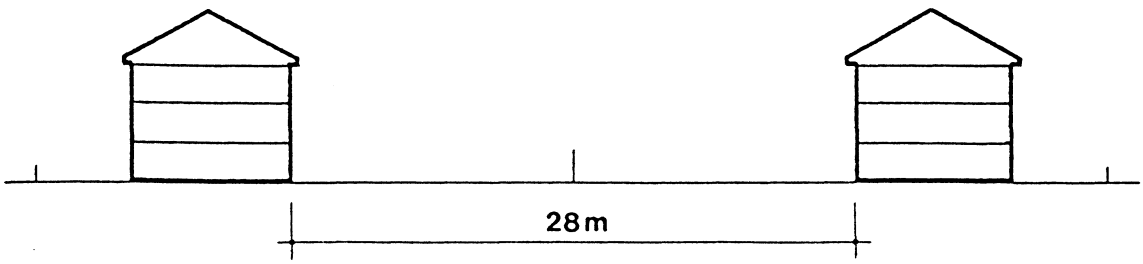

2.11 On corner properties, where principal windows on the rear of one dwelling face the side of another dwelling or block of flats (which does not contain principal windows), a distance of 11m is required from a single-storey dwelling or structure (such as a garage) and 14m from a two-storey dwelling or building. If the rear of a dwelling faces the side of a three-storey block of flats (which does not contain principal windows), then a distance of 20m would be required, to avoid an overbearing effect and to ensure adequate outlook and daylight.

Rear/Side Boundaries

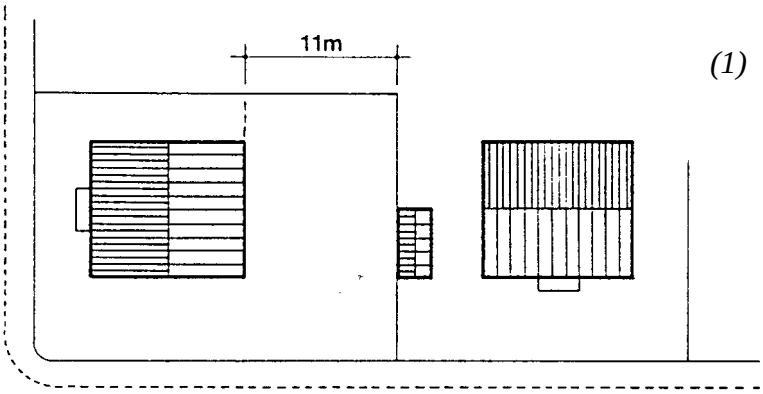

(1) Where the rear of one dwelling faces the side of a single-storey building a minimum of 11m is required.

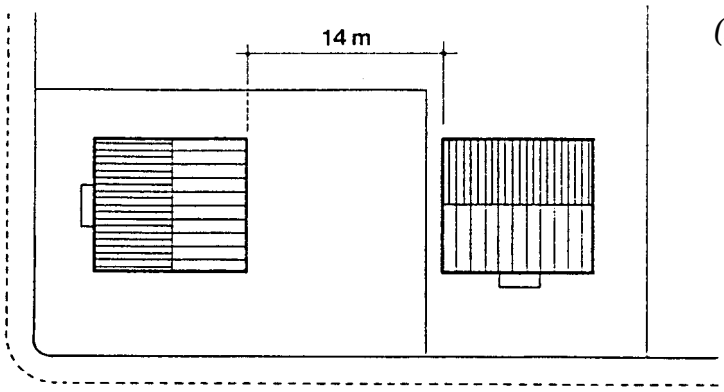

(2) Where the rear of one dwelling faces the side of another two-storey dwelling a minimum of 14m is required

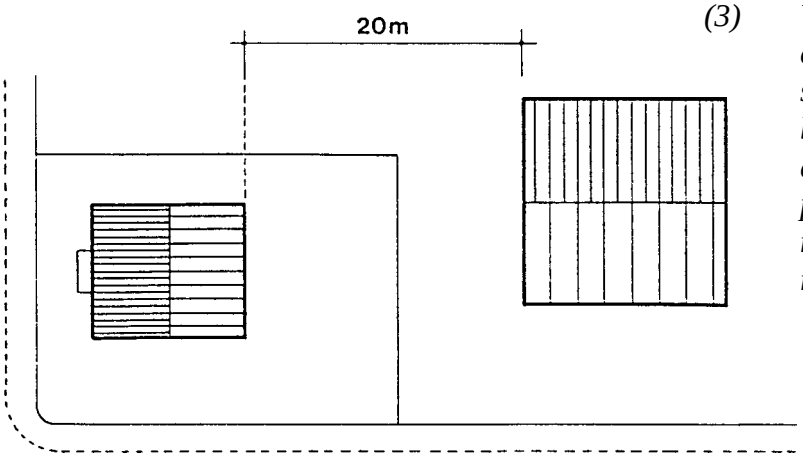

(3) Where the rear of one dwelling faces the side of a three storey block of flats (which does not contain principal windows) a minimum of 20m is required

2.12 Finally, the position of a building on a plot should also take into consideration the position of buildings on adjoining plots either side. Dwellings should not project significantly beyond the rear of adjoining dwellings particularly if they are close to side boundaries since this would be overbearing and lead to loss of light and outlook. A general "rule of thumb" guide is that there should be no development beyond a 45 degree area, measured from the nearest rear windows of the neighbouring dwellings.

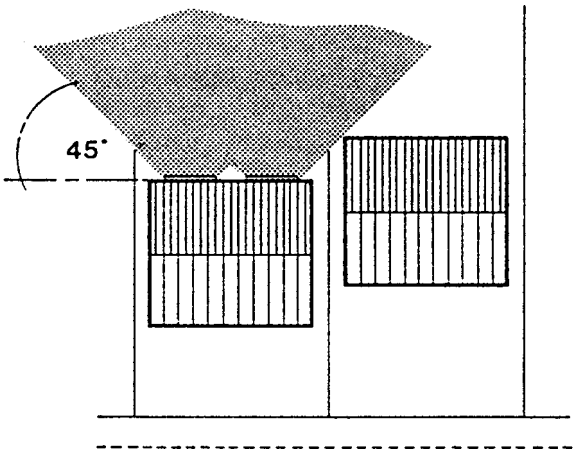

Adjoining Buildings

Dwellings should not project significantly beyond the rear of adjoining dwellings.

FRONT BOUNDARIES

2.13 Whilst the requirement of 22m between facing principal windows, to retain privacy, is essential at the rear it is not usually expected that the same degree of privacy would be provided at the front of a dwelling.

2.14 In the case of infill developments the distance between a dwelling and the front of a plot should usually adhere approximately to the existing "building line". However, where an integral or attached garage is to be provided, the requirement for a 6m hardstanding (see section 4) may determine the distance of the dwelling from the front boundary. Where there is no established building line, and a hardstanding is not required, a minimum of 3m will be required between the dwelling and the front of the plot. Since front garden walls/ fences are usually no more than 1m high this would ensure adequate daylight to front rooms. The minimum of 3m proposed above would be suitable for an urban "street" development and would allow the maximisation of private rear amenity areas. However, in suburban areas and on larger plots, it would be desirable to have deeper front gardens of at least 6m to give a greater sense of space, in keeping with the existing character of an area.

EXTENSIONS

2.15 Houses and bungalows should usually be designed so that it would be possible for extensions to be added without detriment to adjoining properties. Where this is not possible "permitted development" rights will be removed by condition. The Council's Development Control Standard No 3 "Extensions and Alterations to Dwellings" gives information on the type of extension that would normally be acceptable.

3.0 **AMENITY SPACE**

3.1 The rear garden of a dwelling provides a private outdoor amenity space for: the cultivation of plants and vegetables; children to play; washing to be dried, and hobbies pursued, as well as providing an attractive setting for a dwelling. New dwellings should normally have a rear garden sufficiently large to allow for the possibility of adding small extensions without reducing the garden unacceptably. Flats will also require adequate amenity areas. The size and type of amenity space required should be related to the size of a dwelling/flat and whether it is suitable for family occupation. It will also be affected by the character of the area. The main criteria for assessing amenity space are their depth, area, privacy and daylight.

DEPTH

3.2 A minimum rear garden depth for two storey houses is derived from the minimum distance required between the rears of dwellings of 22m, (see 2.7 above). The minimum garden depth is, therefore, usually 11m. However, unless there is at least 28m between the rear of dwellings backing onto each other "permitted development" rights will be removed by condition. It should be noted however that where the rear of one dwelling backs onto the side of another, 14m is required between the dwellings, and this may necessitate a garden of over 11m depth. (See 2.11 above).

Garden Depth

The minimum garden depth is 11m.

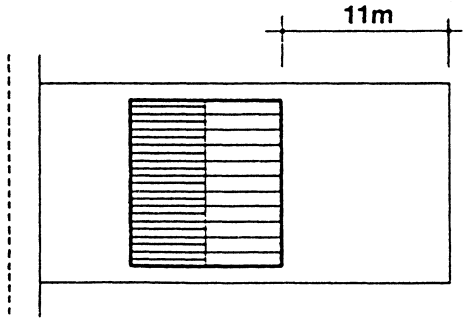

3.3 In some cases a plot may be shaped such that it has very little rear garden but instead a large side garden. This may be acceptable in some circumstances providing that there is at least 22m between any facing principal windows and the side garden is enclosed by a screen wall to give adequate privacy, and has a width of at least 11m.

There is no set standard for garden depth of flats.

AREA

3.4 The area required for a rear garden depends on the size of dwelling/flat that it is proposed to serve. The table below summarises the Council's requirements for dwellings.

Dwelling Type	Garden Area Required (Square Metres)
2 Bed Terraced Dwelling	50
3 Bed Terraced Dwelling	65
Small Semi-Detached and Detached Dwelling (Up to 3 bedrooms or 120m^2)	85
Large Semi-Detached and Detached Dwelling (4 bedrooms or over 120m^2)	100

3.5 It should be noted that the rear garden size for dwellings is calculated by multiplying the depth from the house to the rear boundary by the width of the garden (assuming a rectangular garden). However, where a side garden is over 3m in width, and is enclosed by screen walls to ensure privacy, it can be added to the rear garden area.

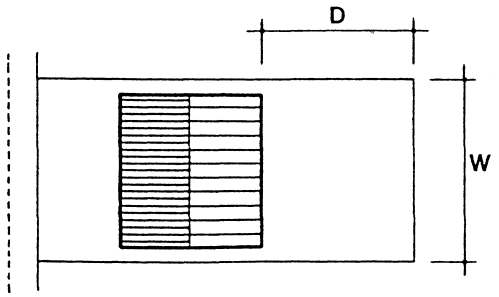

Garden Area

Area = D x W

Garden Area with Side Garden

Where a side garden is over 3m wide and enclosed by screen walls it can be included in area.

Area = (D x W) + (d x w)

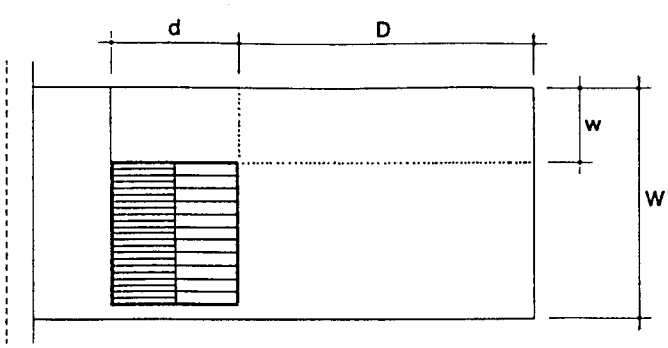

3.6 For flat developments amenity areas should be provided which are equivalent to a minimum of 20 square metres per flat. This can be either in the form of communal areas or individual amenity areas. For ground floor flats it is generally advisable to provide for individual amenity areas. For an area to be included as an amenity area it must be a usable space (i.e. dustbin enclosures etc would not be included) and should be at least 3m in width.

3.7 In urban developments it would be unusual for a rear garden to be completely private. However, the distances required between principal facing windows (see 2.4 above) will help to reduce problems of overlooking of garden areas. It may be possible in designing new housing to incorporate screen walls or "courtyard" designs where at least part of the rear garden is screened. In addition some landscaping measures would help to ensure greater privacy (see 5).

DAYLIGHT

3.8 It is important that rear garden areas are not unduly overshadowed by adjoining properties. The distance required between facing principal windows will usually ensure there is no problem with properties to the rear. Overshadowing of gardens from adjoining properties to the side can be minimised by maintaining a rear "building line". Dwellings will not usually be allowed therefore that project significantly beyond the rear of adjoining dwellings (see 2.12).

4.0 ACCESS AND PARKING PROVISION

4.1 All new residential developments will be required to have an adequate access and to make sufficient parking provision. All developments should therefore accord with the Council's Development Control Standard No 1 "Car Parking Standards". The parking standards are summarised in the appendix.

4.2 Where garages are to be provided these should have a hardstanding of at least 6m in length in order to ensure that cars waiting to enter the garage will not block the highway (pavement and road) and to allow room for cleaning and maintenance. A single garage with hardstanding in front will count as two parking spaces.

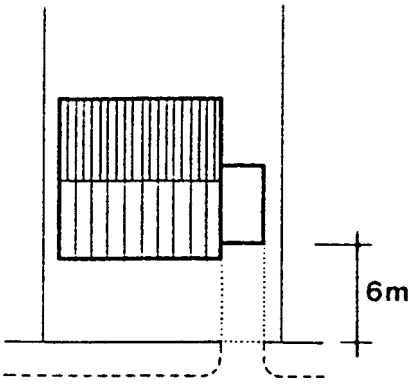

Garage Hardstandings

Should be at least 6m.

4.3 On corner plots a garage should usually be situated as far from the corner as possible in the interests of highway safety. In some cases therefore a garage adjacent to the house would be unacceptable and it may be necessary to locate it at the rear of the garden instead.

Location of Garage

On corner plots a garage adjacent to the house may be unacceptable.

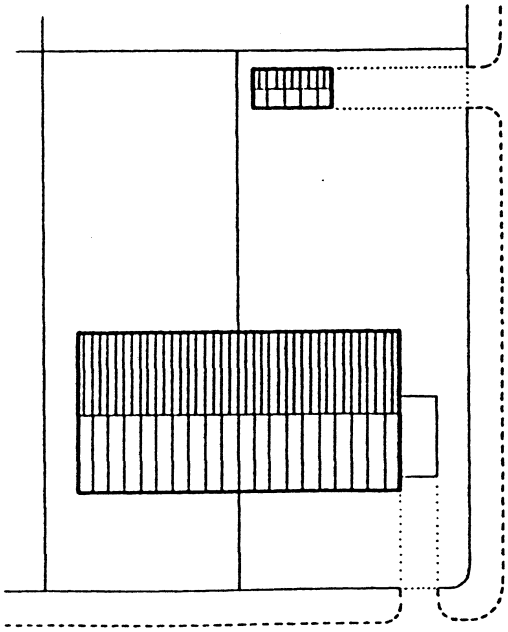

4.4 The visual impact of parking areas is an important consideration. Parking should generally be provided in the curtilage of the dwelling and garages should generally be located to the side of dwellings or be integral. Parking and garage compounds will not usually be acceptable unless they are readily accessible to the dwellings to be served, otherwise an on-street parking problem is likely to occur. They also need to have good surveillance to avoid security problems. Garage compounds should usually be screened from the fronts of dwellings but where this is not possible they should be carefully designed and of good quality materials with adequate arrangements for future maintenance. Front gardens which consist entirely of parking bays are not usually visually acceptable.

5.0 **LANDSCAPING**

5.1 New residential developments should retain important existing landscape features such as healthy trees or established hedges and provide new planting where appropriate. These can often help to assimilate and integrate proposed developments with the existing character of an area and make an important contribution to the appearance and character of an area. Reference should be made to the Council's Design Bulletin No 1 "Trees and Landscaping".

PUBLIC SPACES

5.2 Where public open spaces are to be provided as part of an estate development these will be required to be landscaped to a high standard and should be subject to a legal agreement requiring the transfer of the ownership of the space to the Local Authority and the payment of a commuted sum for future maintenance.

PRIVATE SPACES

5.3 Amenity areas in flat developments should be landscaped to provide a pleasant setting. In housing schemes larger structural elements of landscaping (such as any earthworks required and tree planting) should be included at the outset and will be required by condition. In larger developments space should be specifically set aside for planting groups of trees which can have a greater impact.

FOR FURTHER INFORMATION OR ADVICE PLEASE CONTACT THE DEVELOPMENT CONTROL SECTION OF THE PLANNING AND POLICY DIVISION

APPENDIX

STANDARDS FOR PARKING AND SERVICING IN RELATION TO RESIDENTIAL DEVELOPMENT

DWELLING TYPE	SPECIFIC REQUIREMENTS	TOTAL CAR PARKING PROVISION
SINGLE HOUSE AND ESTATE DEVELOPMENT (where development does not exceed 15 units) *Smaller house sizes*	For each dwelling of 1, 2 or 3 bedrooms and providing that dwelling does not exceed 120 sq.m. gross floor area (excluding integral garage) :- 1 GARAGE OR CAR SPACE and 1 SPACE FOR VISITORS to be provided in curtilage where possible and in any case be in a convenient position which will encourage use.	2
SINGLE HOUSE AND ESTATE DEVELOPMENT (where development does not exceed 15 units) *larger house sizes*	For each dwelling with 4 or more bedrooms or for each dwelling exceeding 120sq.m. gross floor area :- 2 GARAGES OR CAR SPACES and 1 SPACE FOR VISITORS to be provided in curtilage where possible and in any case be a convenient position which will encourage use.	3
ESTATE DEVELOPMENT WITH 16 OR MORE UNITS	AN ADDITIONAL 0.2 SPACES/ DWELLING REQUIRED FOR VISITORS AND SERVICES VEHICLES	
smaller house sizes	as specified above	2.2
larger house sizes	as specified above	3.2

DWELLING TYPE	SPECIFIC REQUIREMENTS	TOTAL CAR PARKING PROVISION
FLATS WITH 3 OR MORE HABITABLE ROOMS	1 CAR SPACE and 0.7 CAR SPACES FOR VISITORS AND SERVICE VEHICLES (to be provided within the layout near to dwellings).	1.7
FLATS AND BEDSITTERS WITH 2 OR LESS HABITABLE ROOMS (not restricted to the elderly)	1 CAR SPACE AND 0.2 CAR SPACES FOR VISITORS AND SERVICE VEHICLES (to be provided within the layout near to dwellings).	1.2
HOUSES IN MULTIPLE OCCUPATION (Properties providing residential accommodation in the form of non self-contained bedsitting rooms or flats, with all occupants sharing to some degree facilities such as kitchens, bathrooms and toilets. This excludes all self-contained accommodation and communal accommodation such as rest homes).	0.5 CAR SPACE PER ROOM/UNIT	0.5
SHELTERED ACCOMMODATION AND FLATS FOR THE ELDERLY (i) Where occupation is restricted by legal agreement to persons of state pensionable age or over.	(a) for each flat with 2 or less habitable rooms:- 0.3 CAR SPACES and 0.2 CAR SPACES FOR VISITORS AND SERVICE VEHICLES	0.5
	For each resident staff:-	1
	(b) For each flat with more than 2 habitable rooms :- 0.55 CAR SPACES AND 0.2 CAR SPACES FOR VISITORS AND SERVICE VEHICLES	0.75

DWELLING TYPE	SPECIFIC REQUIREMENTS	TOTAL CAR PARKING PROVISION
	For each resident staff :-	1
(ii) Where occupation is by legal agreement to persons of 55 or over	1 CAR SPACE AND 0.2 CAR SPACES FOR VISITORS AND SERVICE VEHICLES	1.2
	For each resident staff :-	1

NOTE

These standards will apply to sheltered accommodation and flats for the elderly only where occupancy is restricted by legal agreement to persons of the age specified. Where no such agreement exists the development will be expected to meet the requirements for normal residential development.

HOMES FOR THE ELDERLY (including Nursing Homes)	1 CAR SPACE FOR EVERY 20 RESIDENTS OR INCREMENT OF UP TO 20 RESIDENTS
Private and Local Authority requiring registration under the Registered Homes Act 1984 i.e. providing personal care for more than 3 beds.	1 CAR SPACE FOR VISITORS AT THE RATIO OF 1 SPACE FOR 8 RESIDENTS OR INCREMENTS OF UP TO 8 RESIDENTS ADDITIONAL CAR SPACE FOR STAFF BASED ON A RATE OF ONE SPACE PER FIVE RESIDENTS (all to be provided within the layout near to dwellings) SPACE FOR SERVICE VEHICLES AS REQUIRED
COMMUNITY BLOCKS AND HOMES FOR THE MENTALLY HANDICAPPED	1 CAR SPACE FOR EVERY 20 RESIDENTS OR INCREMENT OF 20 RESIDENTS ADDITIONAL CAR SPACE FOR STAFF BASED ON A RATE OF ONE SPACE PER 2.5 RESIDENTS VISITORS - DUAL USE WITH NON-RESIDENT STAFF SPACES.

DWELLING TYPE	SPECIFIC REQUIREMENTS	TOTAL CAR PARKING PROVISION
COMMUNITY HOMES FOR THE PHYSICALLY HANDICAPPED	1 CAR SPACE FOR EVERY 4 bedrooms (usually for Invacars) TO ALSO CATER FOR VISITORS AND STAFF (all to be provided within the layout near to dwellings) SPACES FOR SERVICE VEHICLES AS REQUIRED	
HOSTELS FOR STUDENTS	1 CAR SPACE FOR RESIDENTS AT THE RATIO OF 1 SPACE FOR EVERY 4 RESIDENTS 1 CAR SPACE FOR VISITORS AT THE RATIO OF 1 SPACE FOR EVERY 20 RESIDENTS SPACES FOR SERVICE VEHICLES AS REQUIRED	

NOTE:

The number of spaces calculated shall be rounded to the nearest whole number.

Adur District Council

Planning, Regeneration & Wellbeing

Good Practice Guidance Note

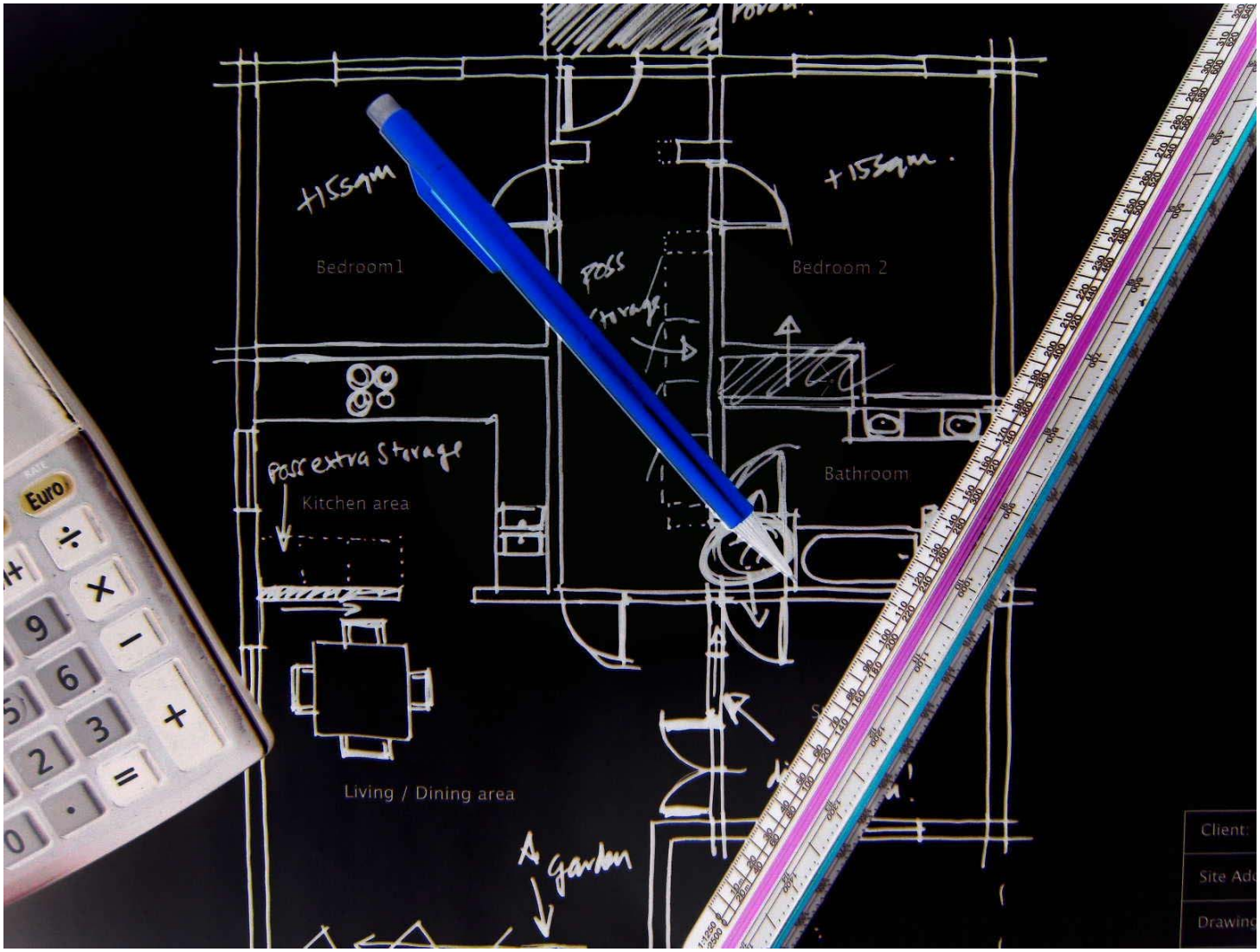

Internal Space Standards for New Homes

Good Practice Guidance Note: Internal Space Standards for New Homes

1. Introduction

1.1 This guidance has been produced in response to growing concerns over the small size of dwellings being built within Adur District, particularly flats, and about their ability to provide satisfactory living conditions and be sustainable in the longer term. Dwellings need to contain sufficient space for normal household activities to be carried out and provide flexibility for the changing needs of individuals, couples and families over time. The guidance was approved at the Council's Cabinet meeting on the 26th January, 2010 following stakeholder consultation in the Autumn of 2009.

1.2 It is intended as an interim measure until a policy is adopted in the Core Strategy followed by a supplementary planning document (SPD) on external and internal space standards for new homes as part of the emerging new Adur District Local Development Framework.

2. National, Regional and Local Policies and Guidance

2.1 Government policy is contained in Planning Policy Statements PPS1 'Delivering Sustainable Development' and PPS3 'Housing'. They contain no guidance on space standards as such but PPS1 states that planning policies should deliver safe, healthy and attractive places to live, and support the promotion of health and wellbeing by making provision for physical activity (paragraph 16). Planning authorities should plan positively for the achievement of high quality and inclusive design for all development (paragraph 34).

2.2 PPS3 contains objectives aimed at securing the provision of high quality, well-designed housing at higher densities (not less than 30 dwellings per hectare), with a mix of housing types, sizes and tenures to support a wide variety of households and create sustainable balanced communities. It stresses the importance of good design. Matters to consider when assessing design quality include the extent to which the development provides or enables good access to communal open recreational space (including play space) as well as private outdoor space such as gardens, patios and balconies (paragraph 16). Particularly where family housing is proposed, it will be important to ensure that the needs of children are taken into account and that there is good provision of recreational areas, including private gardens, play areas and informal play space. These should be well designed, safe, secure and stimulating areas with safe pedestrian access (paragraph 17).

2.3 The South East Plan contains Policy CC4 Sustainable Design and Construction which expects development to contribute to securing high standards of energy and water efficiency and also "designing for flexible use and adaptation to reflect changing lifestyles and needs and the principle of 'whole life costing'". Policy H5 Housing Design and Density encourages positive measures to raise the quality of new housing, reduce its environmental impact and facilitate future adaptation to meet changes in accommodation needs. It states that "local authorities will prepare guidelines for the design of new housing in their areas that encourage the use of sustainable construction methods and address the implications of changing lifestyles for new housing design". In conjunction with the delivery of high quality design, in order to make good use of available land, higher housing densities will be

encouraged with an overall regional target of 40 dwellings per hectare. H6 encourages better use of the existing housing stock, including adopting policies that encourage the conversion of larger houses into flats in appropriate locations where such an approach is consistent with meeting identified local housing needs.

2.4 There are relevant 'saved' policies in the adopted Adur District Local Plan Local Plan 1993-2006 (1996). Policy AH2 relates to new residential development (by way of infilling and redevelopment) and states that new dwellings should be designed so that their appearance, character and scale create a pleasant place in which to live and are in keeping with and enhance the existing local environment, incorporating adequate standards of residential amenity for the new dwellings in terms of amenity space, daylight, outlook and privacy and also accord with the Council's adopted standards (in this case Development Control Standard No.2 'Space around New Dwellings and Flats'). AH5 states a presumption in favour of dwellings suitable for small households (single persons, small families and the elderly) as this is the area of greatest demand but regard will be had to the need for a mix of dwelling types in the locality.

2.5 The supplementary planning guidance contained in the Council's above DC Standard No.2 'Space Around New Dwellings and Flats' only includes standards for external garden space, not internal space, although, for conversion of existing houses to flats, the Council's DC Standard No.4 'Flat Conversions' does include minimum internal space standards and provides guidance on extensions and external changes and amenity space (also referring to DC Standard No.3 'Extensions and Alterations to Dwellings'). The standards for conversions are a gross internal floor area of 30sqm for a studio flat; 45sqm for a one-bedroom flat; 57sqm for a two-bedroom flat and 70sqm for a three-bedroom flat. Current access and car and cycle parking requirements are set out in the 'West Sussex Revised Parking Standards & Transport Contributions Methodology' (WSCC 2003). All of these documents formed the subject of formal consultation processes and carry significant weight.

3. The Importance of Adequate Internal Space

3.1 There has been an increased drive towards making better use of urban land at higher densities, in accordance with current planning policies. Rapidly increasing land values and high levels of demand in the South East for many years until the recent economic recession, have led many developers in the private sector to reduce dwelling sizes (including room sizes) as well as plot sizes. Nevertheless, whilst new dwellings and flats need to be within the price range of purchasers, including first-time buyers, there is equally a need to ensure dwellings provide satisfactory living conditions. In August 2009, the Commission for Architecture and the Built Environment (CABE), published the summary report ***'Space in New Homes: What Residents Think'***, based on the results of a survey of residents' views in London and the SE on the adequacy of space in their homes. It was commissioned jointly by CABE and English Partnerships and the full report is entitled 'Resident Satisfaction with Space in the Home'. The results have led CABE to advise local authorities to:-

1. Introduce or apply existing minimum space standards through their planning departments.

2. Recognise that adequate space in the home has an effect on health, diversity and community cohesion and that insufficient space provision in the local housing stock will impact on local services.

3.2 Unlike private market housing, public sector housing has been required to meet internal space standards. The most well-known historically are the Parker Morris standards (1961) which were required to be applied to Council housing built in the period until 1981. The Homes & Communities Agency (formerly the Housing Corporation) currently apply internal space indicators included in the 'Housing Quality Indicators' (HQI) (April 2008) to new affordable housing projects receiving their funding.

3.3 English Partnerships (EP), also now incorporated into the Homes & Communities Agency, have also produced their own higher space standards (in their publication 'Places, Homes, People – Delivering Quality Places' 2007) for development projects on central government land being disposed of for residential development. English Partnerships, in June 2008, commissioned HATC Ltd, a consultancy specialising in affordable housing policy and practice, to undertake research into sizes of dwellings recently built in London and the South East. HATC Ltd prepared a report for the Greater London Authority (GLA) in 2006 on internal space standards. They also assisted Gentoo Group Ltd (one of the largest social landlords in the UK) to provide a website www.swingacat.info which sets out space standards with the aim of promoting public awareness about the issue of small dwelling sizes in this country.

3.4 Adequate space is important to the health and wellbeing of residents. There needs to be adequate space to undertake normal household activities, allow household members some privacy within the dwelling, and allow children space to play that does not get in the way of other household activities. For example, bedrooms that contain sufficient space for a desk and chair can allow the space to be used for private study. Sufficient bedroom space can allow children to entertain friends.

3.5 Housing that is of sufficient size also enables, subject to suitable design, increased adaptability and sustainability. It is desirable that it is built in a way and of a size that it can be adapted to meet the changing needs of residents over time, for example by adding partitions to create extra rooms or changing layouts. It allows a longer lifespan and thus contributes to sustainability through minimising unnecessarily premature redevelopment or major alteration.

3.6 The Commission for Architecture & the Built Environment (CABE) after examining the value of good design and the costs of bad design, in collaboration with the Home Builders' Federation (HBF) and other partners, has set up ***'Building for Life'***. www.buildingforlife.org.uk. The Government has endorsed this as the national standard for well-designed homes and neighbourhoods. It contains 20 criteria one of which is *"18. Do internal spaces and layout allow for adaptation, conversion or extension?"* Under this, it states that the main consideration is adaptability to take account of changing demands and lifestyles as a result of social, technological and economic conditions by providing flexible internal layouts. Examples include space for a downstairs toilet, lift/stairlift, conservatory/extension, as well as wider doorways and level entrances and a structure that enables internal partition walls to be moved. Rooms need to be big enough to allow them to be used in a variety of ways eg. as workspace, study, bedroom or playroom.

3.7 ***'Lifetime Homes'*** standards have been developed by the Joseph Rowntree Foundation, with 16 design features developed to create a blueprint for quality, flexibility and choice in housing www.lifetimehomes.org.uk.
These 16 features include:- where car parking space is adjacent to the dwelling, it is capable of enlargement to 3.3m wide; sufficient door and hallway width; sufficient circulation space for a wheelchair and space to turn it within the living/dining room; groundfloor space in houses capable of being used as a bedspace; in a house with three or more bedrooms, a wheelchair-accessible toilet at entrance level with drainage provision to enable a shower to be added in future; design of a house to incorporate future provision of a stairlift and a suitably-identified space for a through-the-floor lift to the first floor (eg. to a bedroom next to a bathroom); and design of the bathroom for ease of access to the bath, WC and washbasin.

3.8 The government's intention (as set out in Lifetime Homes, Lifetime Neighbourhoods: A National Strategy for Housing in an Ageing Society, 2008) www.communities.gov.uk is for Lifetime Homes standards to be made mandatory in the ***'Code for Sustainable Homes'*** at level 3 from 2008, at level 4 from 2010 and level 6 from 2013. This will in effect ensure that public sector funded housing is built to 'Lifetime Homes' standards from 2011. With respect to private sector built homes, the government will encourage change through public funding, benchmarking and incentives. Their aspiration is that by 2013 all new homes will be built to Lifetime Homes standards. The 'Code for Sustainable Homes' also includes space-related requirements for storage of household waste, namely either 0.8sqm per dwelling (BS5906) or accommodation of all external containers provided under the Local Authority's refuse scheme without stacking and accessible to the disabled (including wheelchair users) whichever is the larger; internal dedicated space for household recycling facilities (eg. 3 internal storage bins of specified sizes depending on the LA recycling scheme); for home composting facilities; for drying clothes in a secure environment; for safe, weatherproof and secure cycle storage (one cycle for one & two-bedroom dwellings, 2 cycles for three-bedroom dwellings) and 4 cycles for four-bedroom dwellings); and for the provision of outside space that is at least partially private and that is accessible to disabled people.

4. Internal Space Standards

4.1 The standards which follow represent guidance as to what the Council considers to be minimum good practice. In new developments, it would be expected that a significant proportion of dwellings would be built to more spacious standards than the minimum as the policies require a mixture of dwelling sizes and types in order to create balanced communities and provide choice. These standards address functionality. Design and layout are important factors. A dwelling that is well designed and laid out may function better than a larger unit that is poorly designed (such as badly proportioned rooms, poor layout etc). There is flexibility for individual design so long as these minimum standards are taken into account. Essentially, the size and layout of functional spaces within dwellings should be appropriate for the overall size of the dwelling (and therefore for the type of household occupying the unit).

Minimum Internal Floor Areas for Dwellings/flats

The following relate to the total minimum floor area, plus a break down into minimum areas for the various functions of storage; living/cooking/eating; and sleeping:-

Dwelling type & no. bedrooms	**Total minimum floor area**	**Storage space ***	**Living, cooking & eating area**	**Sleeping area**
Studio flat	32sqm	1.5sqm	22sqm	7sqm
One-bedroom flat	51sqm	2.5sqm	22sqm	12sqm
Two-bedroom flat	66sqm	3.5sqm	24sqm	19sqm
Two-bedroom wheelchair flat	71sqm	3.5sqm	26sqm	21sqm
Two-bedroom dwelling	77sqm	3.75sqm	27sqm	24sqm
Three-bedroom dwelling	93sqm	4.5sqm	30sqm	31sqm
Four-bedroom dwelling	106sqm	5.5sqm	33sqm	36sqm

The 'Total minimum floor area' is the gross internal floor area, being the space measured between the inside faces of the enclosing walls of the dwelling unit (measured over space taken by private stairs, partitions, internal storage space, internal chimney breasts and heating appliances, conservatories and internal porches which form an integral part of the habitable space, and internal storage over 1.5m in height). It excludes garages, external storage areas, balconies, porches and lobbies open to the air, non-habitable basements and attics, and any accommodation (eg. sloping ceilings within the roofspace) where the ceiling height is less than 1.5m high (NB. definitions from HQI April 2008). Living rooms should not be narrower than 3.3m (from EP).

* the storage space should be within or adjacent to the flat/dwelling to which it relates and be suitable for the storage of such items as buggies and child scooters.

Minimum Floor Areas for Bedrooms

Bedroom for double bed or twin beds:-	12sqm (with a minimum width of 2.6m)
Bedroom for single person bed:-	7sqm (with a minimum width of 2.6m)

NB. area (but not width dimension) includes built-in wardrobes within bedrooms but not en-suite bathrooms

4.2 The minimum total internal floor area requirements for dwellings listed above follow those of English Partnerships' Quality Standards (and Gentoo Group Ltd) and are approximately 10% more generous than Parker Morris standards They are at the upper end of the range of the Homes & Communities Agency's Housing Quality Indicators. The exception is that an additional standard has been listed for studio flats as they provide choice and enable first time purchasers to access the housing ladder. New standards are being produced by the Homes and Communities Agency which will be

taken into account in the new Supplementary Planning Document to be produced on space standards for new homes following adoption of the Adur Core Strategy.

4.3 There is a need to ensure that dwellings contain sufficient space both internally and externally for the storage of household items and for 'dirty' storage. Surveys carried out elsewhere have revealed that insufficient storage space is the main area of dissatisfaction. Provision should be made for storage cupboards within dwellings with at least 1.5sqm for a single person dwelling and the standards listed above follow those adopted by Mid Sussex District Council which are higher than those of the other bodies.

4.4 The living/cooking/eating areas and bedroom sizes listed above follow those of Gentoo Group (swingacat.info) and the recommendations of HATC Ltd as developed for GLA in 2006. They state that they have been calculated on a qualitative approach (the experience of the project team in developing properties) and a quantitative approach (a calculation of the minimum floor area needed to accommodate the furniture schedules set out in the BRE Housing Design Handbook and the National Housing Federation's Guide to Standards and Quality).

5. Other matters

5.1 Minimum standards for ***rear garden areas*** for houses and bungalows are contained in the Council's Development Control Standard No.2 'Space Around New Dwellings and Flats'. These are 50sqm for a two-bedroom terraced dwelling; 65sqm for a three-bedroom terraced dwelling; 85sqm for a small semi-detached or detached dwelling (up to three-bedrooms or 120sqm floor area); and 100sqm for large semi-detached or detached dwellings. This DC Standard also includes minimum distances between dwellings, etc.

5.2 For flat developments, the above DC Standard states that a minimum of 20 square metres per flat should be provided which is normally in the form of communal areas. However, with larger and taller blocks especially, there is an increasing desire for some form of private outdoor space to be provided for each flat in the form of a ***balcony (or roof terrace)***. This has been recognised by English Partnerships who state that balconies need to be of sufficient size to accommodate a small table and sufficient chairs for each occupant. On this basis HATC (2006) have calculated a standard of 3sqm for a 1 or 2 person flat plus 1sqm for each additional person. A minimum depth of 1.5m and area of 5-9sqm is recommended by English Partnerships. Communal space should be provided to make up the balance of the 20sqm. When designing balconies, the need to avoid unacceptable loss of privacy to other flats or houses is also an important consideration.

5.3 External areas also need to include space for ***refuse storage*** (including for recycling waste). 2 adults typically generate 1.5 sacks per week for recyclable waste plus 1.5 sacks of residual waste (requiring two 140 litre wheeled bins each measuring 0.51m by 0.56m with a height of 1.07m). For a household with 2 adults and 2 children, this increases from 1.5 to 2.5 sacks (requiring two 240 litre wheeled bins each measuring 0.59m by 0.74m with a height of 1.07m). Larger wheeled bins accepted by the Council are 360 litre (0.6m by 0.88m and 1.1m high); 660 litre (1.36m by 0.77m and 1.24m high) and 1100 litres (1.36m by 1.77m and 1.47m high). The necessary space needs to be provided either within each curtilage for dwellings or communally for flats and high density housing, being in a convenient

position for both the householders (including wheelchair users) and waste service operatives and their collection vehicles. In designing the layout for new housing, use should be made of dedicated bin stores or sufficient garden space for refuse storage (with bins capable of being wheeled to the front edge of the property).

5.4 ***Car and cycle parking*** requirements are set out in the adopted 'West Sussex Revised Parking Standards & Transport Contributions Methodology' (WSCC 2003). These standards are being reviewed in 2010 and when adopted new development will need to accord with these. The provision for car and cycle parking needs to be safe, secure, convenient and not detrimental to the street scene.

5.5 Finally, in addition to space-related issues, the Council also emphasises the importance of sustainable design and construction, the conservation of energy and resources, and high quality design. Developers are therefore encouraged to comply with all the criteria set out in ***'Building for Life'*** and ***'Lifetime Homes'*** and to aim to achieve at least level 3 of the ***'Code for Sustainable Homes'*** (see earlier references). The Homes and Communities Agency are due to adopt level 4 in 2010 and account will be taken of this in the consideration of proposals for new housing. Developers should also follow the design advice given in:-

'By Design – urban design in the planning system: towards better practice'
www.communities.gov.uk/publications/planningandbuilding/bydesignurban

West Sussex Design Commission 'Design Principles' www.westsussexdesign.org.uk

For historic areas, the ***'Building in Context Toolkit'*** www.building-in-context.org.uk

For access-related matters, the ***'Manual for Streets'*** www.manualforstreets.org.uk



Adur District Council

Planning, Regeneration & Wellbeing

Civic Centre, Ham Road, Shoreham-by-Sea, West Sussex. BN43 6PR
Telephone: 01273 263222. Fax: 01273 263203. Email developmentcontrol@adur.gov.uk

PART 9

HOUSING

INTRODUCTION

9.1 Traditionally Adur District has been regarded as an attractive location in which to live, including for those retiring to the coast. This has resulted in a high demand for housing and led to a period of rapid housebuilding in the l950's, 60's and 70's. Environmental protection policies have been implemented in more recent years which have slowed down housebuilding. The District Planning Authority must now consider how best to meet both existing and anticipated local housebuilding needs, and ensure a supply of housebuilding land over the Local Plan period.

9.2 A high proportion of the District's housing stock is owner-occupied. The 1991 Census of Population showed that almost 80% of all households lived in their own accommodation (compared with 76% for West Sussex). As most of the existing stock is comparatively modern, it is in relatively good condition and only a very small proportion lack basic amenities. The housing stock amounts to almost 25,300 dwellings.



9.3 The overall amount of new housebuilding in the District over the Local Plan period is determined by the West Sussex Structure Plan 1993. The strategy of the Plan aims to reduce housebuilding rates in West Sussex considerably, compared with recent decades. Policy G2 of the Structure Plan provides the context. New housebuilding should be sufficient to be consistent with regional guidance, of a sufficient scale to meet future housing demand generated by the present population and accommodate net in-migration at a comparable level to average experience over the last decade.*(1)*

AIM AND OBJECTIVES

9.4 The following aim and objectives provide the framework for the policies and development proposals in relation to housing.

Aim

TO MEET THE NEEDS OF THE DISTRICT'S RESIDENTS FOR HOUSING WHILST RECOGNISING THE NEED TO PROTECT THE COUNTRYSIDE AND URBAN ENVIRONMENT.

Objectives

(a) To meet the requirements of the Structure Plan for new housing.

(1) PPG9

(b) To encourage the provision of housing for those unable to afford accommodation on the open market.

(c) To meet housing needs on sites within the built-up area.

(d) To resist the loss of viable residential accommodation.

(e) To recognise the needs of householders to extend their property.

(f) To recognise the need for elderly persons homes, nursing and convalescent homes and others (eg hostels).

WEST SUSSEX STRUCTURE PLAN REQUIREMENTS

9.5 Policy H1 of the Structure Plan requires a total of 1700 new dwellings to be provided in the District between l989 and 2006 with the objective of maintaining a supply of land throughout the Plan period. This is divided into three phases: 900 dwellings between l989 and l996; 400 dwellings between l996 and 2001; and 400 dwellings between 2001 and 2006. This is a gross figure and does not take into account dwellings lost through conversion or redevelopment of existing residential properties, or demolitions.

9.6 The provision of land for residential development comprises existing commitments, specific allocations of land for new housing and an allowance for the completion of dwellings on sites likely to come forward on land not previously identified for housebuilding during the Local Plan period.

9.7 Between mid 1989 and mid 1993, there were 509 housing completions in the District. This leaves a balance of 391 dwellings to be provided for the period up to 1996, and an overall total of 1191 new dwellings by 2006.

9.8 The following policy sets out the District Planning Authority's intentions for meeting the remaining Structure Plan housing requirement of 1191 new dwellings, all of which is wholly within the defined built-up area.

POLICY AH1

The following provision is intended to meet the remaining West Sussex Structure Plan housing requirement for the Adur District in the period 1st July 1993 to mid 2006:-

(a) Development of up to 500 new dwellings on sites currently identified in the West Sussex Residential Land Availability Survey on which planning permission had been granted at 1st July 1993.

(b) Development of 670 new dwellings on sites of up to 1.0 hectare currently unidentified (including infilling, redevelopment, conversions and changes of use).

(c) Development of up to 294 dwellings on sites identified in this Local Plan on which planning permission had not been granted at 1st July 1993 (Development Proposals DP.AH1 to DP.AH3 identified on the Proposals Map).

Permission may be refused for further development if it can be demonstrated that the provision required in that phase will become available in that phase.

9.9 Policy AH1 provides an estimated 1464 dwellings which, therefore, exceeds Structure Plan requirements (by 273 dwellings). However, the rate of housebuilding will be monitored throughout the Local Plan period to assess the rate at which development is occurring. In practice, it is very difficult to control the rate at which development comes forward, particularly on unidentified sites. If monitoring reveals that sites are coming forward too quickly, the District Planning Authority may not necessarily renew unimplemented planning permissions. Paragraphs 9.15 to 9.18 consider the phasing issues in more detail.

INFILL AND REDEVELOPMENT

9.10 Policy AH1(b) refers to the development of "unidentified sites". National planning guidance sets out the basis on which the allowance for completions of dwellings on unidentified sites is to be calculated.*(1)* Based on historic information over a nine year period, it is estimated that about 800 new dwellings will be constructed on currently unidentified sites of up to 1 hectare during the Local Plan period. This figure is likely to be an underestimate as it does not include dwellings granted permission on appeal or unidentified sites of over 1 hectare that have come forward. The information used and method of calculation is taken from annual monitoring undertaken by West Sussex County Council.*(2)*

9.11 Most unidentified sites came forward as a result of infilling, redevelopment, conversion or change of use. There will continue to be such opportunities during the Local Plan period and such development will generally be encouraged providing the land is not subject to any other proposal or reserved for any other purpose in this Local Plan. However, in view of the need to balance the protection of the residential environment of the District against the general demand for new housing, it should not be assumed that new residential development will necessarily be permitted on all infill sites in the built-up area.

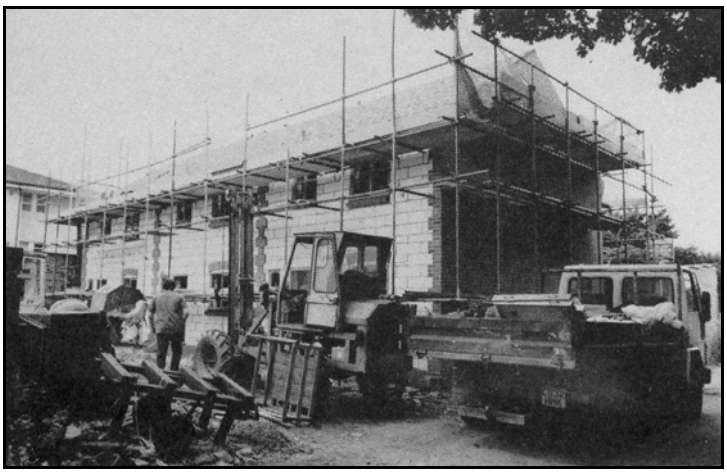

9.12 Whilst it is recognised that the redevelopment of sites in the built-up area with flats helps to satisfy the increasing need for small dwelling units, any proposal should respect the existing character and appearance of the area. All proposals for residential units will be expected to comply with the standards set out in the Council's adopted Development Control Standard No. 2 "Space Around New Dwellings and Flats". Particular attention will be paid to the need to ensure the retention of adequate privacy and daylight for both the existing and proposed new dwellings.

---

(1) PPG3, Annex B, Paragraph 10 - 11

(2) Housing and Land Supply in West Sussex, Strategic Monitoring, October 1994

POLICY AH2

New residential development by way of infilling or redevelopment will be acceptable in the built-up area, providing the site is not allocated for any other purpose in this Local Plan. Any proposal will be expected to be designed so that:-

(a) its appearance, character and scale create a pleasant place in which to live and is in keeping with and enhances the existing local environment with particular attention being paid to the architectural form, height, materials, density and layout of both buildings and associated structures and hard surfaced areas;

(b) it respects the existing natural features of the site, including land form and trees;

(c) it does not have an unneighbourly effect on existing dwellings by reason of unacceptable loss of privacy, daylight/sunlight, outlook or open amenity space;

(d) it incorporates adequate standards of residential amenity for the new dwelling(s) in terms of open amenity space, daylight/sunlight, outlook, and privacy;

(e) access arrangements to the public highway and on-site parking arrangements are acceptable under Policy AT12, and

(f) it accords with the standards adopted by the District Planning Authority.

LOCATION OF NEW HOUSING

9.13 Policy AH1(c) refers to new sites to be developed for housing to provide an estimated 360 new dwellings. These sites, all of which are within the built-up area, are identified in the following development proposals:-

DEVELOPMENT PROPOSALS

The District Planning Authority will grant planning permission for the residential development of the following sites, subject to compliance with all other relevant policies and design standards in this Local Plan:-

		HA	APPROX. UNITS
DP.AH1	**RAILWAY SIDINGS ALLOTMENTS, FISHERSGATE**	**1.25**	**40**
DP.AH2	**PART OF FORMER KINGS MANOR LOWER SCHOOL SITE, MIDDLE ROAD, SHOREHAM-BY-SEA**	**2.67**	**100**

		HA	APPROX. UNITS
DP.AH3	**PART OF SOUTHLANDS HOSPITAL SITE, UPPER SHOREHAM ROAD, SHOREHAM-BY-SEA**	**4.0**	**150**

9.14 Appendix 6(iii) provides additional information on each site, including the anticipated phasing of development.

MAINTAINING A SUPPLY OF LAND FOR NEW HOUSING

Phasing

9.15 National planning guidance makes provision for phasing policies to be included in areas which are under pressure for development.[1] The Secretary of State for the Environment has accepted that such phasing policies are necessary in West Sussex due to the continued pressure for housing development, combined with the environmental constraints of the area, and to allow the Structure Plan objective of maintaining a supply of housebuilding land throughout the Plan period to be met.

9.16 As stated in paragraph 9.5, the overall amount of new housebuilding in Adur District is divided into three phases. When the Structure Plan was originally drafted, it was anticipated that there would be continued strong pressure to develop during the first phase to l996, thus creating additional demand for early development of land in a later phase. This would result in pressure for additions to the total allocation of land for housebuilding.

9.17 The economic recession which commenced in 1990 has affected the housing market. Within the Adur District it is estimated that there will now be only a small excess of provision over requirement during the first phase. To reflect these changes in housing market demand, the Secretary of State for the Environment has indicated how phasing should work in circumstances of: a) slack demand and, b) renewed pressure. Where land has been identified for development within a phase, but does not get developed due to lack of demand, the land can be carried forward for development in a subsequent phase. If however there are more completions during a phase than the requirement stipulates, this is not sufficient reason to defer the development of sites already allocated for that phase except by way of a formal review of the Plan.

9.18 Market demand for housebuilding is unlikely to change significantly before l996. Therefore the division between the first and second phases may be considered to be removed, development will, therefore, be considered in two phases; before and after 2001.

Five Year Land Supply

9.19 National planning guidance also requires local plans to ensure the availability of a five year supply of housing land. There is a small shortfall in supply of available land for housebuilding in the Adur District over the

(1) PPG12, Paragraph 5.38 - 5.42

five year period 1993-1998. However, this mainly reflects a lack of demand rather than a shortage of land for housebuilding. The detailed method of compiling these figures is given in Appendix 6(i).

HOUSING TO MEET LOCAL NEEDS

9.20 The housing provision in Policy AH1 includes:-

(a) "low cost" housing for households that can afford to purchase or rent without subsidy, but only at the lower end of the housing market, and

(b) "social housing", which in this context means housing that is accessible to those households on low income only when supported with some form of subsidy.

9.21 National planning guidance indicates that a community's need for low cost housing is a material planning consideration and that a local planning authority may give an overall target for the provision of such housing generally throughout the Local Plan area, and on specific sites based on evidence of need and site suitability.*(1)*

9.22 It is the aim of Policy H5 of the Structure Plan to ensure that provision is made for both low cost and social housing, by requiring that new developments should normally include an appropriate proportion of both categories. The general aim should be for substantial schemes to include a proportion of both categories, together of the order of 30% of the total dwellings, and on all but the smallest sites there should be a contribution where possible, depending on the housing needs of the local area.

9.23 It is the intention of the District Planning Authority to reflect the general objective of the Structure Plan by seeking to negotiate the provision of low cost and/or social housing on a number of allocated sites. As there is a scarcity of large sites for residential development within the District combined with the clear evidence of housing need outlined in paragraph 9.24, the District Planning Authority will seek to negotiate an element of social and/or low cost housing on all other sites coming forward during the local plan period. Such negotiations will be subject to considerations such as the character of the area, site and market conditions, the housing needs of the area at the time an application is made and other important constraints including the quality of agricultural land. The District Planning Authority does however recognise that there will be circumstances in which any such provision will be inappropriate on individual sites, e.g. provision for special needs housing. Large sites of more than 1.0ha (or sites of less than 1.0ha if located in particularly sensitive areas) will be the subject of guidance to be prepared by the District Planning Authority.

Assessment of Need in Adur District

9.24 The Council has undertaken detailed research into its long term need for housing to meet local needs. The base date of this research is March 1994. In the context of this research the term "social housing" is defined as "housing which is subject to some form of public subsidy either in construction or acquisition which makes it affordable and accessible to those in need who are unable to compete in the market place". The express

(1) PPG3, Paragraph 38 - 49

aim of this research was to define the amount of social housing required to resolve need in terms of affordability, tenure, type, amount, etc. over the Local Plan period to 2006. A summary of the study is included as Appendix 6(ii). The study concludes:-

(a) There is a priority to provide an estimated 197 dwellings for families before 1998 in order to reduce the waiting list within a reasonable time, as well as a smaller number of single person units to deal with people with special needs.

(b) The provision of an estimated 415 dwellings (197 family units and 218 one bed units) before 1998 would permanently rehouse all those on the existing active waiting list in all degrees of need, and families in temporary accommodation. Future similar housing needs, as currently defined in the Council's terms, could be met by re-lets.

(c) The provision of an estimated 103 new dwellings over the Local Plan period would, together with relets, mean that anticipated housing needs would largely be met. However, this implies that many of those in need of housing would have to wait for longer periods that is felt to be acceptable.

Meeting The Need

9.25 The development, before 1998, of a site owned by Adur District Council, the subject of Development Proposal DP.AH1 entirely for social housing purposes will provide 40 new family dwellings.

9.26 Negotiations will take place with the owners/developers of the sites which are the subject of Development Proposals DP.AH2 and DP.AH3 to secure a proportion of social housing, and developers will be expected to enter into legal agreements to this effect.

9.27 In considering applications for residential development, where there is clear evidence of local need and subject to site suitability, the District Planning Authority will, in appropriate cases, seek to negotiate an element of housing designed to be accessible to people with disabilities, including the provision of wheelchair access.

9.28 The following policy, which applies to the Local Plan area, provides the context for social housing provision:-

POLICY AH3

The provision for residential development made in Policy AH1 includes the provision of social housing, which in this context refers to any housing accessible to people not able to compete in the housing market, and of low cost housing to meet market demand.

The District Planning Authority will seek to negotiate the provision of an appropriate proportion of social and low cost housing on the sites specified in Development Proposals DP.AH1 to DP.AH3.

The District Planning Authority will seek to negotiate the provision of a proportion of social and/or low cost housing on all other sites coming forward during the Local Plan period, subject to site and market conditions, the type of development proposed, the character of the area

and other important constraints, and any review of local need as may be undertaken by Adur District Council.

In all cases, planning permission will normally be subject to a legal agreement to this effect.

Social Housing Outside the Built-up Area

9.29 The District Planning Authority may allow some limited release of land outside of the defined built-up area, in line with national planning guidance and Structure Plan Policy H6, in order to increase the provision of social housing within the District.[1] However, this will only be considered if, in the opinion of the District Planning Authority, there is at the time of a planning application being submitted, a proven need to meet the demands of local people who are unable to compete in the existing housing market. As development would not normally be permitted on such sites, any proposal must be in minimal conflict with all other policies in this Local Plan and the District Planning Authority must be satisfied that the housing provided will be retained for local people and remain within the social housing sector in perpetuity. Any planning permission granted will be subject to developers being willing to enter into a legal agreement to control future occupancy. Such "exceptions" sites for social housing development should be well related to the existing defined built-up area and of a standard of design and materials such as to be in keeping with adjoining development. Therefore during the Local Plan period:-

POLICY AH4

The District Planning Authority may permit the development of limited amounts of land outside of, but adjoining, the defined built-up area for social housing purposes only, to meet a proven local need. Local need is defined as those people wishing to reside within the Adur District who can meet the following criteria:-

(a) i) are resident within the Adur District, or

ii) have been resident in the Adur District for 3 years in the previous 10 years; and/or

(b) have been employed permanently within the Adur District for at least 3 years.

The District Planning Authority must be satisfied that the housing provided will be in minimal conflict with all other policies in this Local Plan. Prior to the grant of any planning permission, developers will be expected to enter into a legal agreement to ensure the retention in perpetuity of the development within the social housing sector for local people unable to compete in the existing housing market.

---

(1) PPG3, Paragraph 44 and Annex A

DWELLING SIZE

9.30 In common with the rest of West Sussex, for many years the District has experienced a reduction in the size of households and a trend towards the creation of single person households. Therefore, there is an increasing need for additional small dwelling units to accommodate an increasing number of households even though overall population levels are not projected to increase significantly. During the Local Plan period it will be important that a proportion of all new residential development consists of smaller types of accommodation to cater for this need. Therefore:-

POLICY AH5

There will be a presumption in favour of the supply of dwelling units suitable for small households (such as single persons, small families and the elderly). However, the District Planning Authority, in implementing this policy, will have regard to the desirability of a mix of dwelling types both within the development the locality subject to the need to accord with the criteria contained in Policy AH2.

LOSS OF DWELLINGS

9.31 It is also considered important to safeguard the District's existing residential accommodation, including flats and maisonettes above parades of shops, from reduction by loss to unnecessary non-residential development either by way of redevelopment or by change of use. In particular, the loss of any dwellings that are suitable or could be made suitable by conversion for occupation by small households or households not easily able to compete in the existing housing market will be strongly resisted. Therefore:-

POLICY AH6

Within the built-up area planning permission will not be granted for development (including changes of use) that would lead to the loss of existing dwellings and other types of residential accommodation, especially those which are suitable for small households and households not easily able to compete in the existing housing market.

HOUSEHOLDER PROPOSALS

9.32 Improvements to dwellings by way of appropriate extensions and alterations will generally be permitted within the built-up area. Where planning permission is required, extensions and alterations will be expected to have regard to design and materials which should respect the character of both the original dwelling and the area generally, the effect upon neighbouring dwellings and car parking requirements.

9.33 A detailed Development Control Standard No. 3 "Extensions and Alterations to Dwellings" has been adopted by the Council and all proposals will be expected to comply with its criteria. Therefore, within the Local Plan area:-

POLICY AH7

Extensions and alterations to existing houses and bungalows will be expected to be designed so that:-

(a) proposals would not result in an unacceptable degree of overlooking, loss of natural light or overbearing effect on neighbouring dwellings;

(b) design and materials are sympathetic to both the original dwelling and the area in general;

(c) the proportion of the garden area taken by the proposal would not be excessive having regard to the character of the area;

(d) access and car parking provision is acceptable under Policy AT12, and

(e) it accords with the standards adopted by the District Planning Authority.

9.34 Where improvements are proposed to Listed Buildings and to buildings within a Conservation Area, even higher standards of design and materials will be required and any proposal will also be expected to comply with Policy AB4.

ACCOMMODATION FOR DEPENDANT RELATIVES

9.35 Proposals are frequently received by the District Planning Authority for annexes intended for occupation by a close relative or dependant of the occupiers of the main dwelling. Such proposals will be expected to comply with the criteria for other extensions in Policy AH7, and, in addition, should be designed to form an integral part of, and be capable of being readily incorporated into, the main dwelling once it ceases to be occupied by the dependant. The purpose of this is that such extensions are often unsuitable for permanent occupation as a separate unit of accommodation in that they lack their own curtilage and have inadequate car parking. Therefore, in the Local Plan area:-

POLICY AH8

Extensions to existing dwellings for separate occupation by dependants of the occupiers of main dwellings will be permitted providing that:-

(a) the proposed extension complies with Policy AH7, and

(b) the extension is designed as an integral part of the existing dwelling and will be capable of being converted to become part of the main dwelling once occupation by the dependant has ceased.

9.36 Detached annexes will not be permitted unless the proposal fully complies with Policy AH2.

FLAT CONVERSIONS

9.37 Older and larger units of the existing housing stock may be suitable for conversion into a number of smaller units. The District Planning Authority recognises that such conversions provide a useful addition to the housing stock of smaller dwellings for sale or for rent. However, the District Planning Authority wishes to retain an adequate stock of purpose-built small family houses and, therefore, in considering whether a property is suitable for conversion to flats, will be mindful of the size and type of dwelling as well as the effect on the character of the area.

9.38 Any conversion will be required to have sufficient external amenity space and parking provision and must not adversely affect adjacent properties. Difficulties do arise where semi-detached and terraced dwellings are proposed for conversion. This often introduces living areas at first-floor level adjacent to bedroom accommodation of adjoining properties. For this reason, the District Planning Authority does not favour the conversion of semi-detached or terraced houses.

9.39 The Council has adopted Development Control Standard No. 4 "Flat Conversions" which sets down minimum standards for flat conversions. Any proposal will be expected to comply with its criteria or with any new standards that may be adopted during the Local Plan period. Therefore, in the Local Plan area:-

POLICY AH9

The conversion of dwellinghouses into smaller self-contained units will be permitted providing that:-

(a) access and car parking provision is acceptable under Policy AT12 and can be made within the curtilage of the original dwelling without detriment to the character of the area;

(b) the proposal would not have an unacceptable adverse effect on neighbouring properties in terms of overlooking or noise transmission through party walls, and
(c) the type of property concerned and the standard of accommodation to be provided accord to the standards adopted by the District Planning Authority.

The conversion of small family houses will not be permitted.

RESIDENTIAL CARE AND NURSING HOMES

9.40 During the 1980s, the District Planning Authority received many proposals to convert existing dwellings into rest or nursing homes, although proposals have recently diminished owing to Government policy which includes encouraging care for the elderly in their own homes.*(1)*

9.41 The District Planning Authority is mindful of the need to retain small family dwelling houses and therefore will only consider changes of use of large detached dwellings in their own grounds. Sufficient external amenity

(1) National Health Service and Community Care Act 1990

space within the curtilage is considered essential to allow the residents to sit outside and the District Planning Authority will expect a minimum of 10 square metres per resident of amenity space to be provided at the rear of the building.

9.42 In addition any such proposal must be capable of satisfying access and car parking standards. Where extensions to such buildings are proposed they will normally be acceptable providing they are in keeping with the original building and area generally.

9.43 Residential homes providing personal care fall within the same Use Class (C2) "Residential Institutions" as residential schools, colleges or training centres.[1] Those providing no significant element of care would fall into Use Class C1 "Hotels and Hostels". Therefore, where a subsequent change to a use within this class would be likely to have a detrimental effect on local amenities, this will be prevented by the use of conditions. Therefore, in the Local Plan area:-

POLICY AH10

The District Planning Authority will only permit changes of use or conversions of dwellinghouses to residential care, nursing and other types of home (e.g. mentally disabled persons) providing that:-

(a) the building is located within the built-up area with good access to community and public transport facilities;

(b) the building is large and detached and has an extensive curtilage with adequate amenity space in the order of 10 square metres per resident and sufficient separation from neighbouring dwellings; and

(c) access and car parking provision is acceptable under Policy AT12.

Extensions to existing residential care or nursing homes will only be permitted where they comply fully with Policy AH7.

9.44 Where extensions to rest or nursing homes are proposed they will normally be acceptable provided they are in keeping with the original building and area generally.

RESIDENTIAL MOBILE HOMES

9.45 The Broadway and the Willowbrook Mobile Home Parks in Lancing are currently in residential use. The District Council itself has also established on part of the Golden Sands Holiday Caravan Park in Lancing, (on the basis of a temporary planning permission) a residential mobile home area specifically to help meet the needs of statutorily homeless persons in the District.

9.46 The District Planning Authority accepts that, in any areas of high property values, residential mobile homes offer an alternative housing option that is sometimes less expensive than housing of normal construction. However, the land use principle is considered to be virtually

---

(1) Town and Country Planning (Use Classes) Order 1987

the same in either case and therefore it follows that any new residential mobile home park in the District could only be considered if proposed on land that is also acceptable for permanent housing purposes. In the context of the general strategy of this Local Plan, in practice this means no new residential mobile home parks will be acceptable outside the built-up area. However, the District Planning Authority may allow some limited release of land outside of the defined built-up area in order to increase the provision of social housing to meet a proven local need as explained in paragraph 9.29 and Policy AH4. The implications of development in areas at risk from flooding have been considered in paragraph 4.14. Therefore, within the built-up area as shown on the Proposals Map:-



POLICY AH11

The use of land for the stationing of mobile homes for residential occupation will only be permitted providing:-

(a) the land is acceptable for permanent residential development, and

(b) on-site parking arrangements and access to the public highway are acceptable under Policy AT12.

GYPSY CARAVANS

9.47 West Sussex County Council is a designated county under the Caravan Sites Act 1968 and sufficient accommodation in the form of caravan sites in West Sussex has been provided. A site of 12 pitches has been established at the Withy Patch on the A27 in Lancing and is managed by the Adur District Council on behalf of the West Sussex County Council. It is considered that this site adequately meets the needs of Gypsies in the District and no further provision is necessary. Therefore, in the Local Plan area:-

POLICY AH12

The District Planning Authority considers that sufficient provision exists within the Adur District for the reasonable needs of gypsy caravans and the provision of any further sites will not, therefore, be permitted.

HOUSEBOATS

9.48 A large number of houseboats are located within the western arm of Shoreham Harbour on long-established moorings. The District Planning Authority recognises that whilst the condition and construction of some of

the houseboats is poor, they fulfil a useful housing purpose and provide a unique type of accommodation. New houseboat moorings require planning permission as does the construction of significant new superstructures on houseboats and significant structures on the riverbank. The District Planning Authority is unable to identify any areas appropriate for new houseboat moorings. It is however, satisfied that the impact on the environment of any proposal received for new houseboats or the replacement of existing houseboats can be properly judged against policies contained elsewhere in the Local Plan.

HOUSING IN AREAS SEVERELY AFFECTED BY EXCESSIVE NOISE

9.49 Areas adjoining main roads, the railway line or Shoreham Airport are affected by noise. Part 4 of this Local Plan provides policies for residential development in such areas.

ADUR DISTRICT LOCAL PLAN

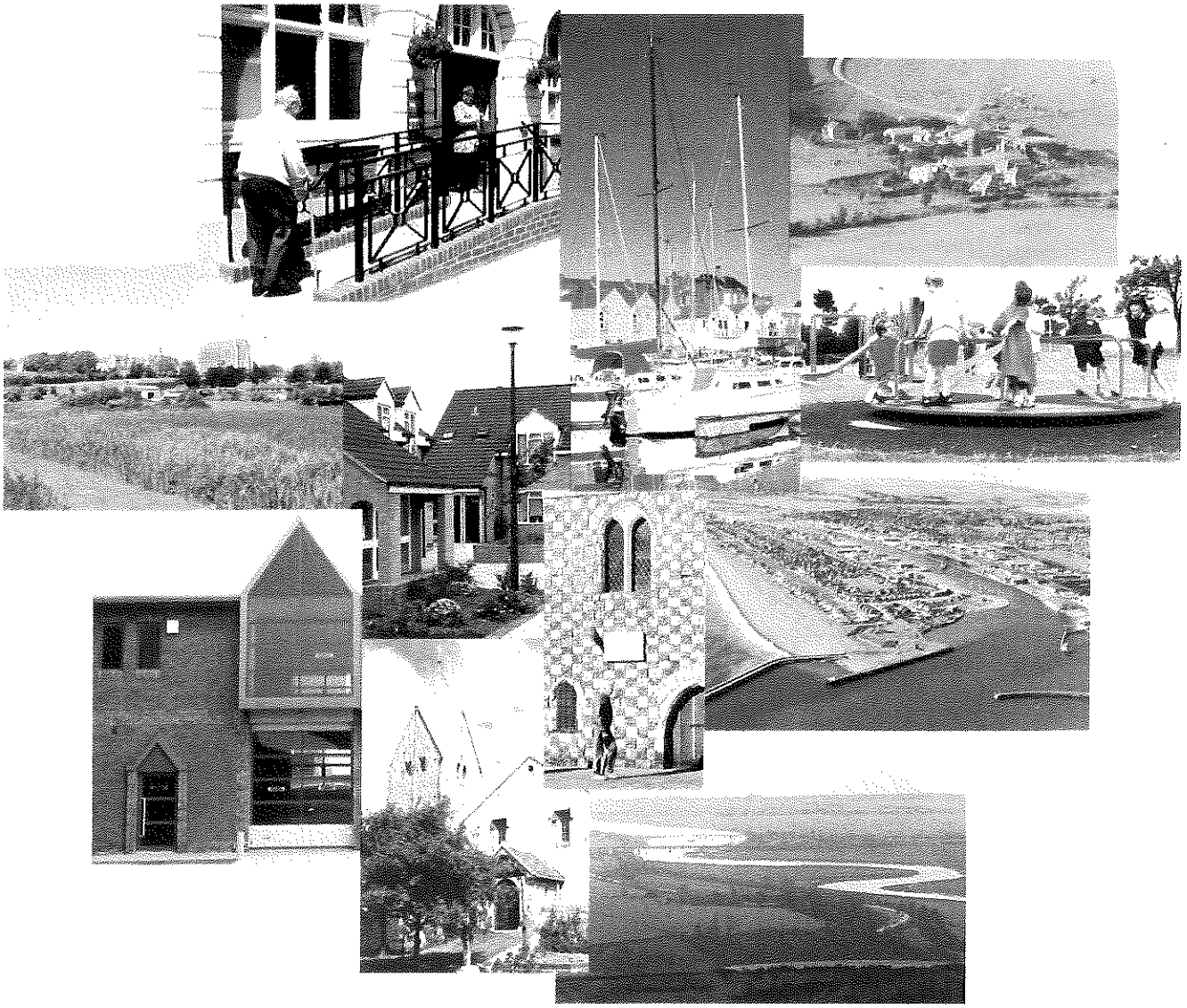

ADUR
DISTRICT COUNCIL

APRIL 1996

ADUR DISTRICT LOCAL PLAN 1996

This plan covers the period 1st July 1993 to the middle of 2006.

D J Wade B.Sc (Econ) MCD,AILAM,MRTPI
Director of Development Services
Adur District Council
Civic Centre
Ham Road
Shoreham by Sea
West Sussex BN43 6PR

Telephone 01273-263000
Fax 01273-263203
E Mail developmentcontrol@adur.gov.uk
DX 59765 Shoreham-by-Sea

This Local Plan has been written and prepared by the Policy and Implementation Section of the Planning Division, Development Services Department.

W Z Boden BA (Hons), MSC,DMS,MRTPI,M.I.Mgt
Assistant Director - Development Services (Planning)

A K Perrett MRTPI	:	Head of Policy and Implementation Services
A Glover MRTPI	:	Planning Officer
D Morrison MRTPI	:	Planning Officer
Mrs J Proctor MRTPI	:	Planning Officer
G Wright	:	Planning Technician

The contributions of the following Officers is acknowledged:-

K E Morgan MRTPI : Head of Development Control Services
P Spedding BA FCIH : Head of Housing Development and Need

Ms Georgina Emery
Sustainability Officer
Adur District Council
Room 219, Civic Centre, Ham Road
Shoreham-By-Sea
West Sussex BN43 6PR

Housing & Planning Directorate
Bridge House
1 Walnut Tree Close
Guildford
GU1 4GA

Switchboard: 01483 882 255
Tel: 01483 882 266
Fax: 01483 882 489

e-mail: John.Cheston@gose.gsi.gov.uk
www.gose.gov.uk

25 September 2007

Our Ref:
Your Ref:

Dear Ms Emery

PLANNING AND COMPULSORY PURCHASE ACT 2004
ADUR DISTRICT LOCAL PLAN APRIL 1996 SAVED POLICIES APPLICATION

I am writing with reference to your application on behalf of Adur District Council of 29 March for a direction under paragraph 1(3) of Schedule 8 to the Planning and Compulsory Purchase Act 2004 in respect of policies in the Adur District Local Plan.

The Secretary of State's Direction is attached. Those policies not listed in the Direction will expire on 27 September 2007.

The Secretary of State's assessment of whether saved policies should be extended is based upon the criteria set out in Planning Policy Statement 12: *Local Development Frameworks* and the Department for Communities and Local Government protocol on saving policies. The Secretary of State's decisions concern some policies where there have been representations from a third party expressing views that differ from those of the local authority. Also, her decisions in respect of some policies have the effect of saving policies that an authority requested should not be extended. For clarity, where either or both of these two circumstances apply, the Secretary of State's reasons are set out in the table at the end of this letter.

The extension of saved policies listed in this Direction does not indicate that the Secretary of State would endorse these policies if presented to her as new policy. It is intended to ensure continuity in the plan-led system and a stable planning framework locally, and in particular, a continual supply of land for development.

Local planning authorities should not suppose that a regulatory local plan-style approach will be supported in forthcoming development plan documents (DPDs). LPAs should adopt a positive, spatial, strategy-led approach to DPD preparation and not seek to reintroduce the numerous policies of many local plans.

Printed on 100% recycled paper with 75% post-consumer

INVESTOR IN PEOPLE
POSITIVE ABOUT DISABLED PEOPLE

The exercise of extending saved policies is not an opportunity to delay DPD preparation. LPAs should make good progress with local development frameworks according to the timetables in their local development schemes. Policies have been extended in the expectation that they will be replaced promptly and by fewer policies in DPDs. Maximum use should be made of national and regional policy especially given the development plan status of the regional spatial strategy.

Following 27 September 2007, the extended policies should be read in context. Where policies were adopted some time ago, it is likely that material considerations, in particular the emergence of new national and regional policy and also new evidence, will be afforded considerable weight in decisions. In particular, we would draw your attention to the importance of reflecting policy in Planning Policy Statement 3 *Housing* and the Housing Green Paper – *Homes for the future: more affordable, more sustainable* in relevant decisions.

Policy Ref	Reason	Extended	Not Extended

Yours sincerely

John Cheston
Senior Planning Officer

Printed on 100% recycled paper with 75% post-consumer

INVESTOR IN PEOPLE

POSITIVE ABOUT DISABLED PEOPLE

DIRECTION UNDER PARAGRAPH 1(3) OF SCHEDULE 8 TO THE PLANNING AND COMPULSORY PURCHASE ACT 2004

POLICIES CONTAINED IN THE ADUR DISTRICT LOCAL PLAN

ADOPTED APRIL 1996

The Secretary of State for Communities and Local Government in exercise of the power conferred by paragraph 1(3) of Schedule 8 to the Planning and Compulsory Purchase Act 2004 directs that for the purposes of the policies specified in the Schedule (1) to this direction, paragraph 1(2)(a) of Schedule 8 to the Planning and Compulsory Purchase Act 2004 does not apply.

Signed by authority of the
Secretary of State

John Cheston
Senior Planning Officer
Housing and Planning Directorate
Government Office for the South East

25 September 2007

Printed on 100% recycled paper with 75% post-consumer

INVESTOR IN PEOPLE

POSITIVE ABOUT DISABLED PEOPLE

SCHEDULE

POLICIES CONTAINED IN THE ADUR DISTRICT LOCAL PLAN APRIL 1996

Policy Number	Policy Title/Purpose
AG1	Location of Development
AG3	The relationship between development and the provision of infrastructure
AP4	Development and Land Drainage
AP5	Development and Land Drainage
AP9	Minimising Pollution: Visual
AC1	Development of the Countryside Generally
AC2	The Sussex Downs Area of Outstanding Natural Beauty
AC3	The Sussex Downs Area of Outstanding Natural Beauty
AC4	The Strategic Gaps
AC6	Agriculture, Horticulture and Forestry
AC7	Agriculture, Horticulture and Forestry
AC8	Diversification of the Rural Economy
AC9	Existing Buildings in the Countryside
AC15	Horse Riding Establishments
AB1	Archaeology
AB3	Conservation areas and their enhancement
AB4	Conservation areas and their enhancement
AB5	Conservation areas and their enhancement
AB6	Conservation areas and their enhancement
AB7	Listed Buildings
AB8	Listed Buildings
AB9	Listed Buildings
AB10	Listed Buildings

Printed on 100% recycled paper with 75% post-consumer

INVESTOR IN PEOPLE

POSITIVE ABOUT DISABLED PEOPLE

Policy Number	Policy Title/Purpose
AB11	Listed Buildings
AB13	Improving Town Centres
AB14	Improving Town Centres
AB15	Improving Town Centres
AB16	The Riverside setting of Shoreham-By-Sea
AB17	Controlling Advertisements
AB19	Controlling Advertisements
AB20	Shopfronts
AB21	Shopfronts
AB22	Safeguarding Amenity Open Space
AB23	Trees in the Urban Area
AB25	Trees in the Urban Area
AB26	Trees in the Urban Area
AB27	Landscaping
AB28	Satellite Television Dishes
AB29	Other Telecommunications Development
AB30	Crime Prevention
AB32	Per Cent for Art
AT1	The A259 Coast Road
AT2	The A283
AT3	The South Side of the Canal
AT4	The North Side of the Harbour and Shoreham Beach
AT5	Roadside Facilities for Motorists
DPAT 1	Development proposal Land at Pond Road
AT6	Development Proposal Ropetackle
AT7	Public Lorry Parking

Printed on 100% recycled paper with 75% post-consumer

INVESTOR IN PEOPLE

POSITIVE ABOUT DISABLED PEOPLE

Policy Number	Policy Title/Purpose
AT9	Shoreham Airport
AT10	Facilities for Pedestrians, Equestrians and Cyclists
AT11	The Coastal Link
AH2	Infill and Development
DPAH3	Part of Southlands Hospital Site, Upper Shoreham Road
AH3	Housing to Meet Local Needs
AH5	Dwelling Size
AH6	Loss of Dwellings
AH7	Householder Proposals
AH9	Flat Conversions
AH10	Residential Care and Nursing Homes
AH11	Residential Mobile Homes
AE2	Redevelopment Opportunities
DPAE 2	Land at Dolphin Road, Shoreham
AE4	Mixed Developments
AE5	Office Development
DPAE 4	Land at Ropetackle, Shoreham
AE6	Town centres
AE7	Shoreham Harbour
AE8	Shoreham Harbour
AE9	Shoreham Harbour
DPAE 6	Land on the South Side of the Canal
DPAE 7	Land on the North Side of the Canal
DPAE 8	Land on the North Side of the Canal
AE10	Shoreham Airport
AE11	Shoreham Airport

Printed on 100% recycled paper with 75% post-consumer

INVESTOR IN PEOPLE

POSITIVE ABOUT DISABLED PEOPLE

Policy Number	Policy Title/Purpose
AE12	Shoreham Airport
AE13	Shoreham Airport
AE14	Shoreham Airport
DPAE 9	Land at Shoreham Airport
DPAE 11	Heritage Aviation Museum
AE15	New Development Outside Established Business/Industrial Areas
AE16	Existing Businesses in Residential Areas
AE17	Existing Businesses in Residential Areas
AE18	Business and Industry Outside the Built up Area
AS1	Protection of the District's Shopping Centres
DPAS 1	Land at Ropetackle, Shoreham-By-Sea
AS2	Retail development outside town centres
AS3	Retail development outside town centres
AS4	Retail development outside town centres
AS5	Retail development outside town centres
ACS1	Education
ACS2	Lancing College
ACS3	Lancing College
ACS4	Health Services
ACS5	Community Centres, Worship, Police, Fire Service
DPAN1	Land to South of Sompting Village
AR1	Public Open Space, Recreation areas not owned by ADC, Allotments, New areas of public open space and Children's play areas
AR2	Public Open Space, Recreation areas not owned by ADC, Allotments, New areas of public open space and Children's play areas
AR3	Public Open Space, Recreation areas not owned by ADC, Allotments, New areas of public open space and Children's play areas
AR4	Public Open Space, Recreation areas not owned by ADC, Allotments, New areas of public open space and Children's play areas

Printed on 100% recycled paper with 75% post-consumer

INVESTOR IN PEOPLE

POSITIVE ABOUT DISABLED PEOPLE

Policy Number	Policy Title/Purpose
AR5	Public Open Space, Recreation areas not owned by ADC, Allotments, New areas of public open space and Children's play areas
AR6	Public Open Space, Recreation areas not owned by ADC, Allotments, New areas of public open space and Children's play areas
DPAR 1	Land adjacent to Sompting Cemetery
AR7	Development of Leisure & Sporting facilities
AR8	Recreation in the Countryside
AR9	Recreation in the Countryside
DPAR 4	Shoreham Cement Works
DPAR5	Land east of Lancing bounded by A27 Trunk Road and Shoreham Airport
AR11	Coastal Recreation
AR12	Coastal Recreation
AR13	Shoreham Harbour
AR14	Shoreham Harbour
AR15	Shoreham Harbour
AR16	Shoreham Harbour
AR17	Shoreham Harbour
AR20	Tourism

Printed on 100% recycled paper with 75% post-consumer

INVESTOR IN PEOPLE

POSITIVE ABOUT DISABLED PEOPLE