Planning Services, Adur District Council

Civic Centre,
Ham Road,
Shoreham-by-Sea,
West Sussex,
BN43 6PR

Tel : (01273) 263222 (calls may be recorded)
website : www.adur.gov.uk
e-mail : developmentcontrol@adur.gov.uk

ADUR DISTRICT COUNCIL

PLANNING DIVISION
PLAN No. AD/0089/09
DATE RECEIVED 9 MAR 2009

Application for Planning Permission. Town and Country Planning Act 1990

Publication of planning applications on council web sites
Please note that with the exception of applicant contact details and Certificates of Ownership, the information provided on this application form and in supporting documents may be published on the council's website.
If any other information that is provided as part of the application which falls within the definition of personal data under the Data Protection Act and is not to be published on the council's website, please contact the council's planning department.

1. Applicant Name, Address and Contact Details

Title: Mr First name: Howard Surname: Moore

Company name

Street address: Flat 7
85 Penhill Road

Town/City Lancing
County: West Sussex
Country: UK
Postcode: BN16 8HB

	Country Code	National Number	Extension Number
Telephone number:	[redacted]	[redacted]	
Mobile number:			
Fax number:			

Email address:

Are you an agent acting on behalf of the applicant? (●) Yes ( ) No

2. Agent Name, Address and Contact Details

Title: Mr First Name: darryl Surname: shear

Company name: shear design

Street address: 2
Saffron Close

Town/City Shoreham by Sea
County: West Sussex
Country: UK
Postcode: bn43 6jf

	Country Code	National Number	Extension Number
Telephone number:			
Mobile number:	07881	656512	
Fax number:			

Email address: darrylshear@hotmail.com

3. Description of the Proposal

Please describe the proposed development including any change of use:
Replacing exisitng Timber framed windows with new upvc windows with wood grain effect.

Has the building, work or change of use already started? ( ) Yes (●) No

4. Site Address Details

Full postal address of the site (including full postcode where available)

House: 85 Suffix:

House name: Hazelwood Lodge

Street address: Penhill Road

Town/City: LANCING

County: West Sussex

Postcode: BN15 8HB

Description of location or a grid reference
(must be completed if postcode is not known):

Easting: 518516

Northing: 104059

Description:

5. Pre-application Advice

Has assistance or prior advice been sought from the local authority about this application? ○ Yes ◉ No

6. Pedestrian and Vehicle Access, Roads and Rights of Way

Is a new or altered vehicle access proposed to or from the public highway? ○ Yes ◉ No

Is a new or altered pedestrian access proposed to or from the public highway? ○ Yes ◉ No

Are there any new public roads to be provided within the site? ○ Yes ◉ No

Are there any new public rights of way to be provided within or adjacent to the site? ○ Yes ◉ No

Do the proposals require any diversions/extinguishments and/or creation of rights of way? ○ Yes ◉ No

7. Waste Storage and Collection

Do the plans incorporate areas to store and aid the collection of waste? ○ Yes ◉ No

Have arrangements been made for the separate storage and collection of recyclable waste? ○ Yes ◉ No

8. Neighbour and Community Consultation

Have you consulted your neighbours or the local community about the proposal? ○ Yes ◉ No

9. Council Employee / Member

Is the applicant or agent related to any member of staff or elected member of the council? ○ Yes ◉ No

10. Materials

Please state what materials (including type, colour and name) are to be used externally (if applicable):

Windows - description:

Description of *existing* materials and finishes:

dark wood stained framed single glased windows

Description of *proposed* materials and finishes:

Upvc double glazed windows in white

Are you supplying additional information on submitted plan(s)/drawing(s)/design and access statement? ○ Yes ◉ No

11. Vehicle Parking

Please provide information on the existing and proposed number of on-site parking spaces:

Type of vehicle	Existing number of spaces	Total proposed (including spaces retained)	Difference in spaces

12. Foul Sewage

Please state how foul sewage is to be disposed of:

Mains sewer ☒ Package treatment plant ☐ Unknown ☐

Septic tank ☐ Cess pit ☐

Other

Are you proposing to connect to the existing drainage system? ○ Yes ◉ No ○ Unknown

13. Assessment of Flood Risk

Is the site within an area at risk of flooding? Refer to the Environment Agency's Flood Map showing flood zones 2 and 3 and consult Environment Agency standing advice and your local planning authority requirements for information as necessary. ○ Yes ◉ No

If Yes, you will need to submit an appropriate flood risk assessment to consider the risk to the proposed site.

Is your proposal within 20 metres of a watercourse (e.g. river, stream or beck)? ○ Yes ◉ No

Will the proposal increase the flood risk elsewhere? ○ Yes ◉ No

How will surface water be disposed of?

☐ Sustainable drainage system ☐ Main sewer ☐ Pond/lake

☐ Soakaway ☒ Existing watercourse

14. Biodiversity and Geological Conservation

To assist in answering the following questions refer to the guidance notes for further information on when there is a reasonable likelihood that any important biodiversity or geological conservation features may be present or nearby and whether they are likely to be affected by your proposals.

Having referred to the guidance notes, is there a reasonable likelihood of the following being affected adversely or conserved and enhanced within the application site, OR on land adjacent to or near the application site:

a) Protected and priority species

○ Yes, on the development site ○ Yes, on land adjacent to or near the proposed development ◉ No

b) Designated sites, important habitats or other biodiversity features

○ Yes, on the development site ○ Yes, on land adjacent to or near the proposed development ◉ No

c) Features of geological conservation importance

○ Yes, on the development site ○ Yes, on land adjacent to or near the proposed development ◉ No

15. Existing Use

Please describe the current use of the site:

domestic flats

Is the site currently vacant? ○ Yes ◉ No

Does the proposal involve any of the following:

Land which is known to be contaminated? ○ Yes ◉ No

Land where contamination is suspected for all or part of the site? ○ Yes ◉ No

A proposed use that would be particularly vulnerable to the presence of contamination? ○ Yes ◉ No

Application advice
If you have said Yes to any of the above, you will need to submit an appropriate contamination assessment.

16. Trees and Hedges

Are there trees or hedges on the proposed development site? ○ Yes ◉ No

And/or: Are there trees or hedges on land adjacent to the proposed development site that could influence the development or might be important as part of the local landscape character? ○ Yes ◉ No

If Yes to either or both of the above, you will need to provide a full Tree Survey with accompanying plan before your application can be determined. Your Local Planning Authority should make clear on its website what the survey should contain, in accordance with the current 'BS5837: Trees in relation to construction - Recommendations'

17. Trade Effluent

Does the proposal involve the need to dispose of trade effluents or waste? ◉ Yes ○ No

If Yes, please describe the nature, volume and means of disposal of trade effluents or waste:

- The contractors (Lancing Glassworks) have a waste certificate and hold skips on their premises. This waste is then removed by Rabbit and pending on the materials, it is recycled.
- Due to the simplicity of the scheme, there will be a minimum amount of waste generated during the installation. All windows are made to measure.

18. Residential Units

Does your proposal include the gain or loss of residential units? ◯ Yes ◉ No

19. All Types of Development: Non-residential Floorspace

Does your proposal involve the loss, gain or change of use of non-residential floorspace? ◯ Yes ◉ No

20. Employment

If known, please complete the following information regarding employees:

	Full-time	Part-time	Equivalent number of full-time
Existing employees	0	0	0
Proposed employees	0	0	0

21. Hours of Opening

If known, please state the hours of opening for each non-residential use proposed:

Use	Monday to Friday Start Time	Monday to Friday End Time	Saturday Start Time	Saturday End Time	Sunday and Bank Holidays Start Time	Sunday and Bank Holidays End Time	Not Known
A1							☒
A2							☒
A3							☒
A4							☒
A5							☒
B1A							☒
B1B							☒
B1C							☒
B2							☒
B8							☒
C1							☒
C2							☒
D1							☒
D2							☒
Other							☒

22. Site Area

What is the site area? 126 sq.metres

23. Industrial or Commercial Processes and Machinery

Please describe the activities and processes which would be carried out on the site and the end products including plant, ventilation or air conditioning. Please include the type of machinery which may be installed on site:

Contractor to remove all primary glazing. Install new double glazed Upvc windows.
No machinery or plant to be installed on site

Is the proposal for a waste management development? ◯ Yes ◉ No

24. Hazardous Substances

Is any hazardous waste involved in the proposal? ◯ Yes ◉ No

25. Site Visit

Can the site be seen from a public road, public footpath, bridleway or other public land? ◉ Yes ◯ No

If the planning authority needs to make an appointment to carry out a site visit, whom should they contact? (Please select only one)

◯ The agent ◉ The applicant ◯ Other person

26. Certificates (Certificate A)

Certificate of Ownership - Certificate A

Town and Country Planning (General Development Procedure) Order 1995 Certificate under Article 7

I certify/The applicant certifies that on the day 21 days before the date of this application nobody except myself/ the applicant was the owner (owner is a person with a freehold interest or leasehold interest with at least 7 years left to run) of any part of the land or building to which the application relates.

Title: Mr | First name: Darryl | Surname: Shear

Person role: Agent | Declaration date: 05/03/2009 | ☒ Declaration made

26. Certificates (Agricultural Holdings Certificate)

Agricultural Holding Certificate

Town and Country Planning (General Development Procedure) Order 1995 Certificate under Article 7

Agricultural Land Declaration - You Must Select Either A or B

(A) None of the land to which the application relates is, or is part of an agricultural holding. ◉

(B) I have/The applicant has given the requisite notice to every person other than myself/the applicant who, on the day 21 days before the date of this application, was a tenant of an agricultural holding on all or part of the land to which this application relates, as listed below: ○

Title: Mr | First Name: Darryl | Surname: Shear

Person role: Agent | Declaration date: 05/03/2009 | ☒ Declaration Made

27. Declaration

I/we hereby apply for planning permission/consent as described in this form and the accompanying plans/drawings and additional information. ☒

Date 05/03/2009

SHEAR DESIGN
ARCHITECTURAL DESIGNER

Ax0089109
- 9 MAR 2009

First floor showing kitchen window.

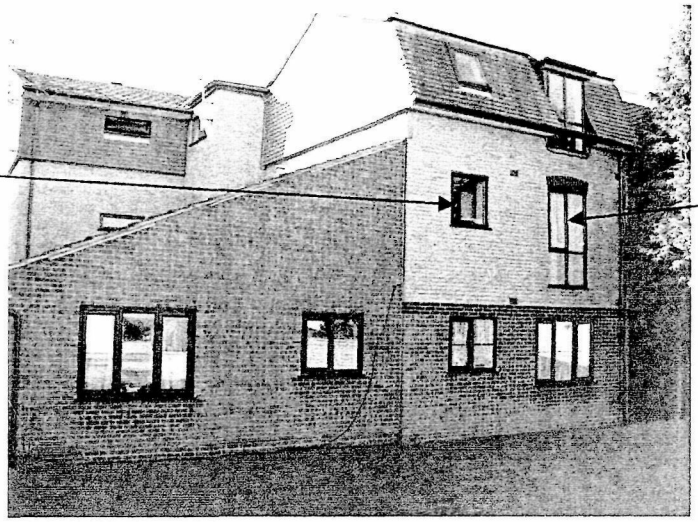

First floor showing rear lounge window.

First floor showing rear lounge window. As above

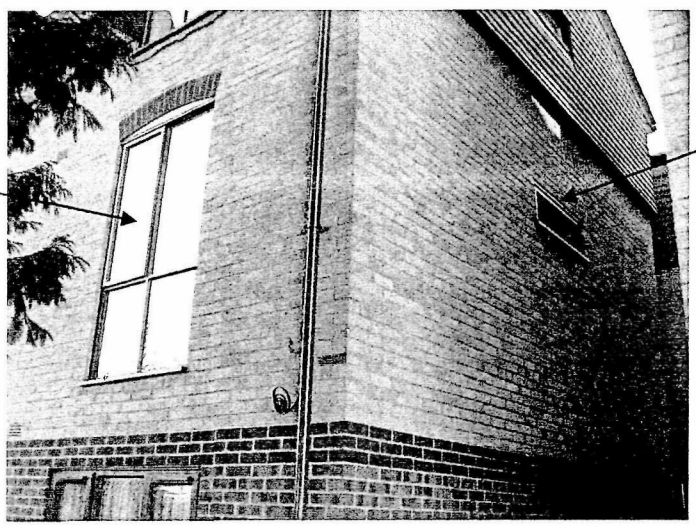

Third floor showing side lounge room.

Project : Mr Moore

Elevation

Dwg No. : 09/094 SY2

Date : 02.03.09

2 Saffron Close,
Shoreham-by -Sea,
West Sussex,
BN43 6JF

Direct line Tel : 01273 273827
Mobile No. : 07881 656512
e-mail :
darrylshear@hotmail.com

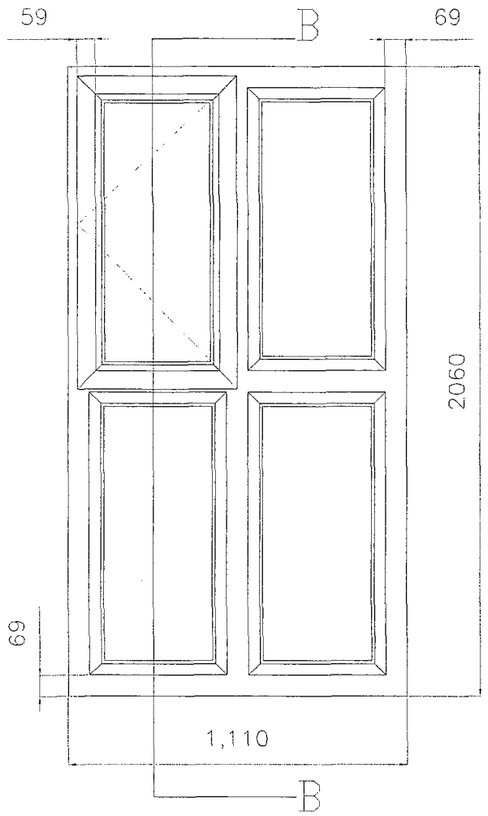

LOUNGE REAR WINDOW
1110 X 2060mm

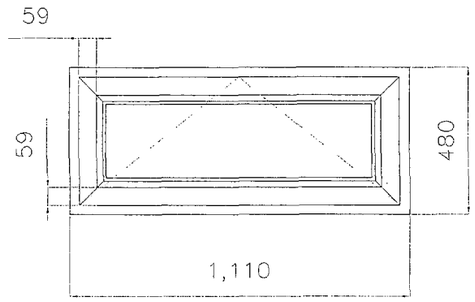

LOUNGE SIDE WINDOW
1110 X 480mm

Proposed windows 1:20

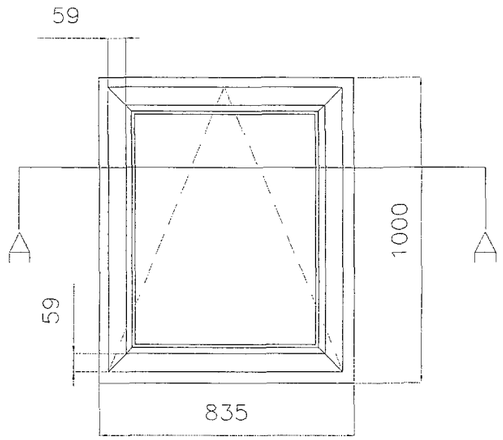

KITCHEN REAR WINDOW
835 X 1000mm

New Upvc windows to have wood grain finish to match exisiting.
New double glazed UPVC windows with trickle vents, friction stays, and lockable handles to PAS 011. All top windows to have restraints to match exisiting.
All new windows and doors to be fitted by FENSA regestered company

ADUR DISTRICT COUNCIL
PLANNING DIVISION
PLAN No. Ad0089/09/01
DATE RECEIVED - 9 MAR 2009

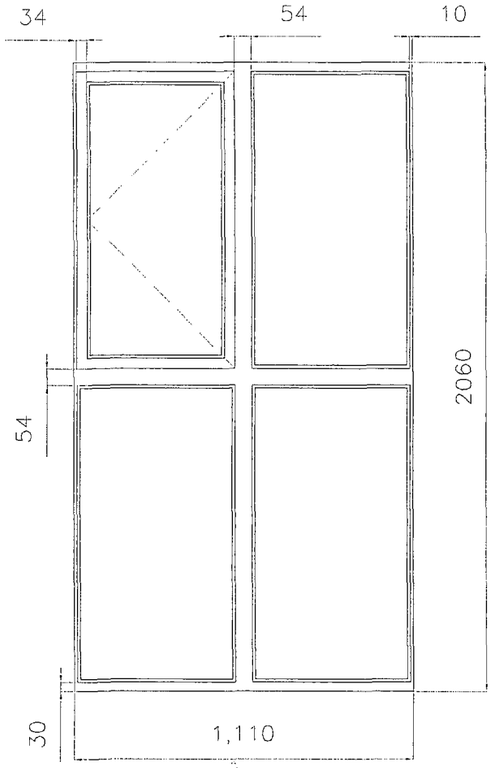

LOUNGE REAR WINDOW
1110 X 2060mm

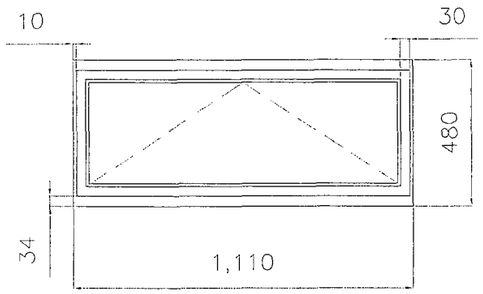

LOUNGE SIDE WINDOW
1110 X 480mm

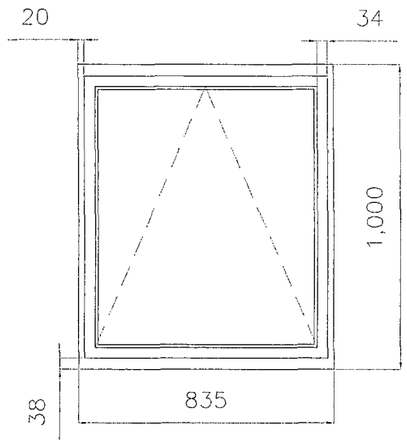

KITCHEN REAR WINDOW
835 X 1000mm

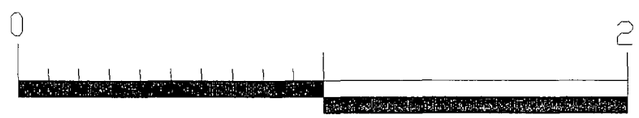

Existing windows 1:20

0

General Notes

No.	Revision/Issue	Date

Firm Name and Address
SHEAR DESIGN
ARCHITECTURAL DESIGNER

Project Name and Address
Mr Moore
Flat 7
Hazelwood lodge
Penhill Road
Lancing
West Sussex
BN15 8HB

Project	Sheet
09/094	SK 1
Date: 02.03.09	
Scale: 1:20	

X-Section A - A Scale 1:2

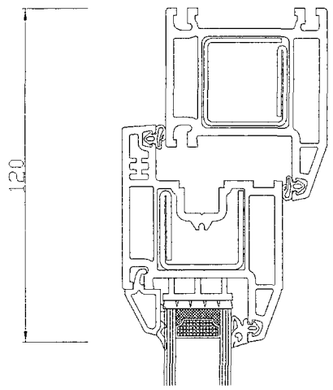

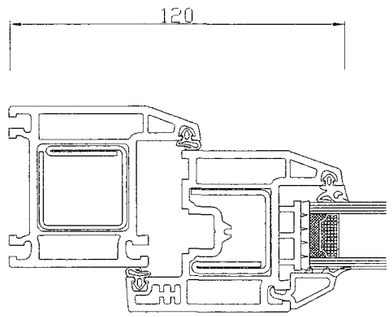

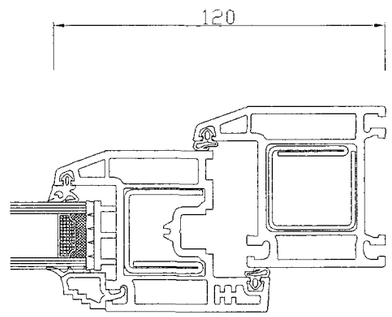

New double glazed UPVC windows with trickle vents, friction stays, and lockable handles to PAS 011.

All new windows and doors to be fitted by FENSA regestered company

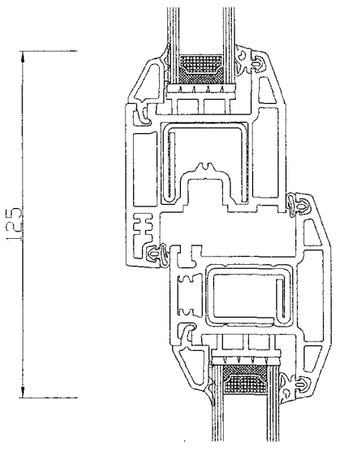

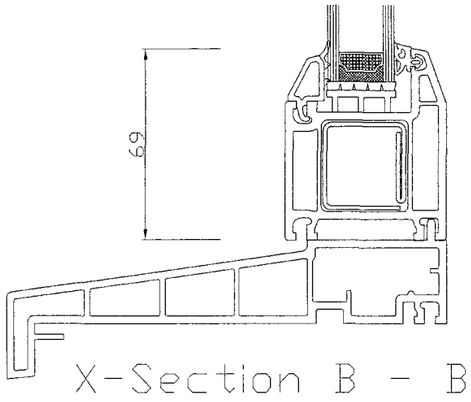

X-Section B - B Scale 1:2



SECTION THROUGH WINDOW 1:2

General Notes

ADUR DISTRICT COUNCIL
PLANNING DIVISION
PLAN No. Axc0089109
DATE RECEIVED - 9 MAR 2009

No.	Revision/Issue	Date

Firm Name and Address

SHEAR DESIGN
ARCHITECTURAL DESIGNER

Project Name and Address

Mr Moore
Flat 7
Hazelwood lodge
Penhill Road
Lancing
West Sussex
BN15 8HB

Project	Sheet
09/094	SK 2
Date: 02.03.09	
Scale: 1:2	



Location Plan 1:1250

0 10 20 30 40 50m

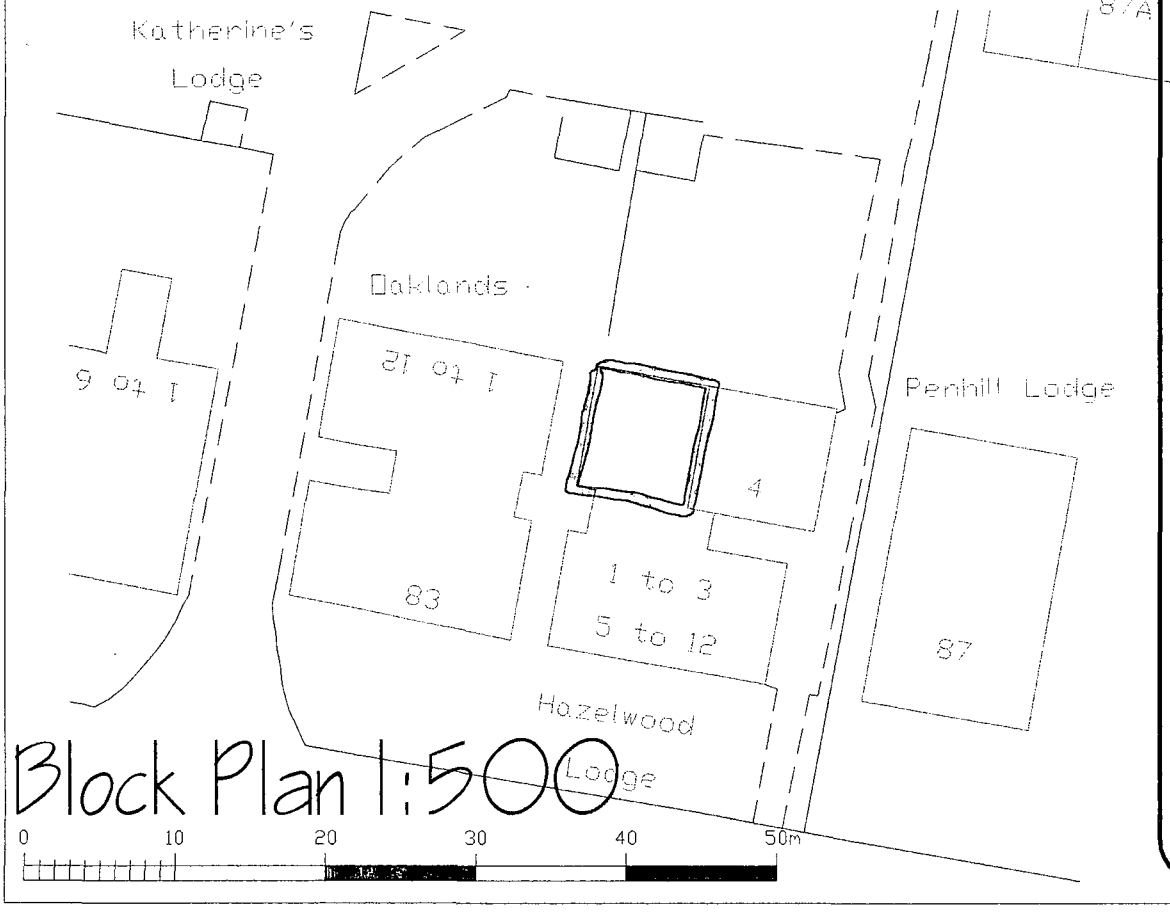

Block Plan 1:500

0 10 20 30 40 50m

ADUR DISTRICT COUNCIL
PLANNING DIVISION
PLAN No. Aoc/0089/09
DATE RECEIVED - 9 MAR 2009

General Notes

No.	Revision/Issue	Date

Firm Name and Address

SHEAR DESIGN
ARCHITECTURAL DESIGNER

Project Name and Address

Mr Moore
Flat 7
Hazelwood lodge
Penhill Road
Lancing
West Sussex
BN15 8HB

Project	Sheet
09/094	SY 1
Date: 02.03.09	
Scale: 1:1250 & 1:500	