Planning Services, Adur District Council

Civic Centre,
Ham Road,
Shoreham-by-Sea,
West Sussex,
BN43 6PR

Tel : (01273) 263222 (calls may be recorded)
website : www.adur.gov.uk
e-mail : developmentcontrol@adur.gov.uk

ADUR DISTRICT COUNCIL
PLANNING DIVISION
PLAN No. AD/0099/09
DATE - 9 MAR 2009

Application for Planning Permission.
Town and Country Planning Act 1990

Publication of planning applications on council web sites
Please note that with the exception of applicant contact details and Certificates of Ownership, the information provided on this application form and in supporting documents may be published on the council's website.
If any other information that is provided as part of the application which falls within the definition of personal data under the Data Protection Act and is not to be published on the council's website, please contact the council's planning department.

1. Applicant Name, Address and Contact Details

Title: Mr | First name: D | Surname: Heyman

Company name:

Street address: Flat 5, Cliff Lodge, Old Sorts Farm road
Town/City: Lancing
County: West Sussex
Country: UK
Postcode: BN15 8JD

	Country Code	National Number	Extension Number
Telephone number:			
Mobile number:		[redacted]	
Fax number:			

Email address:

Are you an agent acting on behalf of the applicant? (●) Yes ( ) No

2. Agent Name, Address and Contact Details

Title: Mr | First Name: darryl | Surname: shear

Company name: shear design

Street address: 2, Saffron Close
Town/City: Shoreham by Sea
County: West Sussex
Country: UK
Postcode: bn43 6jf

	Country Code	National Number	Extension Number
Telephone number:			
Mobile number:	07881	656512	
Fax number:			

Email address: darrylshear@hotmail.com

3. Description of the Proposal

Please describe the proposed development including any change of use:
Replacing exisitng Timber framed windows with new upvc windows.

Has the building, work or change of use already started? ( ) Yes (●) No

4. Site Address Details

Full postal address of the site (including full postcode where available)

House: 0 Suffix:

House name: Flat 5

Street address: Cliff Lodge

Old Salts Farm Road

Town/City: LANCING

County: West Sussex

Postcode: BN15 8JD

Description of location or a grid reference
(must be completed if postcode is not known):

Easting: 518933

Northing: 103989

Description:

5. Pre-application Advice

Has assistance or prior advice been sought from the local authority about this application? ○ Yes ◉ No

6. Pedestrian and Vehicle Access, Roads and Rights of Way

Is a new or altered vehicle access proposed to or from the public highway? ○ Yes ◉ No

Is a new or altered pedestrian access proposed to or from the public highway? ○ Yes ◉ No

Are there any new public roads to be provided within the site? ○ Yes ◉ No

Are there any new public rights of way to be provided within or adjacent to the site? ○ Yes ◉ No

Do the proposals require any diversions/extinguishments and/or creation of rights of way? ○ Yes ◉ No

7. Waste Storage and Collection

Do the plans incorporate areas to store and aid the collection of waste? ○ Yes ◉ No

Have arrangements been made for the separate storage and collection of recyclable waste? ○ Yes ◉ No

8. Neighbour and Community Consultation

Have you consulted your neighbours or the local community about the proposal? ○ Yes ◉ No

9. Council Employee / Member

Is the applicant or agent related to any member of staff or elected member of the council? ○ Yes ◉ No

10. Materials

Please state what materials (including type, colour and name) are to be used externally (if applicable):

Windows - description:

Description of *existing* materials and finishes:

timber framed single glased windows

Description of *proposed* materials and finishes:

Upvc double glazed windows in white

Are you supplying additional information on submitted plan(s)/drawing(s)/design and access statement? ○ Yes ◉ No

11. Vehicle Parking

Please provide information on the existing and proposed number of on-site parking spaces:

Type of vehicle	Existing number *of spaces*	Total proposed (including spaces retained)	Difference in spaces

12. Foul Sewage

Please state how foul sewage is to be disposed of:

Mains sewer	☒	Package treatment plant	☐	Unknown	☐
Septic tank	☐	Cess pit	☐		

Other

Are you proposing to connect to the existing drainage system? ○ Yes ◉ No ○ Unknown

13. Assessment of Flood Risk

Is the site within an area at risk of flooding? Refer to the Environment Agency's Flood Map showing flood zones 2 and 3 and consult Environment Agency standing advice and your local planning authority requirements for information as necessary. ○ Yes ◉ No

If Yes, you will need to submit an appropriate flood risk assessment to consider the risk to the proposed site.

Is your proposal within 20 metres of a watercourse (e.g. river, stream or beck)? ○ Yes ◉ No

Will the proposal increase the flood risk elsewhere? ○ Yes ◉ No

How will surface water be disposed of?

☐ Sustainable drainage system	☐ Main sewer	☐ Pond/lake
☐ Soakaway	☒ Existing watercourse	

14. Biodiversity and Geological Conservation

To assist in answering the following questions refer to the guidance notes for further information on when there is a reasonable likelihood that any important biodiversity or geological conservation features may be present or nearby and whether they are likely to be affected by your proposals.

Having referred to the guidance notes, *is there a reasonable likelihood of the following being affected adversely or conserved and enhanced* within the application site, OR on land adjacent to or near the application site:

a) Protected and priority species

○ Yes, on the development site ○ Yes, on land adjacent to or near the proposed development ◉ No

b) Designated sites, important habitats or other biodiversity features

○ Yes, on the development site ○ Yes, on land adjacent to or near the proposed development ◉ No

c) Features of geological conservation importance

○ Yes, on the development site ○ Yes, on land adjacent to or near the proposed development ◉ No

15. Existing Use

Please describe the current use of the site:

domestic flats

Is the site currently vacant? ○ Yes ◉ No

Does the proposal involve any of the following:

Land which is known to be contaminated? ○ Yes ◉ No

Land where contamination is suspected for all or part of the site? ○ Yes ◉ No

A proposed use that would be particularly vulnerable to the presence of contamination? ○ Yes ◉ No

Application advice
If you have said Yes to any of the above, you will need to submit an appropriate contamination assessment.

16. Trees and Hedges

Are there trees or hedges on the proposed development site? ○ Yes ◉ No

And/or: Are there trees or hedges on land adjacent to the proposed development site that could influence the development or might be important as part of the local landscape character? ○ Yes ◉ No

If Yes to either or both of the above, you will need to provide a full Tree Survey with accompanying plan before your application can be determined. *Your Local Planning Authority should make clear on its website what the survey should contain, in accordance with the current* 'BS5837: Trees in relation to construction - Recommendations'

17. Trade Effluent

Does the proposal involve the need to dispose of trade effluents or waste? ◉ Yes ○ No

If Yes, please describe the nature, volume and means of disposal of trade effluents or waste:

- *The contractors (Lancing Glassworks) have a waste certificate and hold skips on their premises. This waste is then removed by* Rabbit and pending on the materials, it is recycled.
- Due to the simplicity of the scheme, there will be a minimum amount of waste generated during the installation. All windows are made to measure.

18. Residential Units

Does your proposal include the gain or loss of residential units? ○ Yes ◉ No

19. All Types of Development: Non-residential Floorspace

Does your proposal involve the loss, gain or change of use of non-residential floorspace? ○ Yes ◉ No

20. Employment

If known, please complete the following information regarding employees:

	Full-time	Part-time	Equivalent number of full-time
Existing employees	0	0	0
Proposed employees	0	0	0

21. Hours of Opening

If known, please state the hours of opening for each non-residential use proposed:

Use	Monday to Friday Start Time	Monday to Friday End Time	Saturday Start Time	Saturday End Time	Sunday and Bank Holidays Start Time	Sunday and Bank Holidays End Time	Not Known
A1							☒
A2							☒
A3							☒
A4							☒
A5							☒
B1A							☒
B1B							☒
B1C							☒
B2							☒
B8							☒
C1							☒
C2							☒
D1							☒
D2							☒
Other							☒

22. Site Area

What is the site area? 112 sq.metres

23. Industrial or Commercial Processes and Machinery

Please describe the activities and processes which would be carried out on the site and the end products including plant, ventilation or air conditioning. Please include the type of machinery which may be installed on site:

Contractor to remove all primary glazing. Install new double glazed Upvc windows.
No machinery or plant to be installed on site

Is the proposal for a waste management development? ○ Yes ◉ No

24. Hazardous Substances

Is any hazardous waste involved in the proposal? ○ Yes ◉ No

25. Site Visit

Can the site be seen from a public road, public footpath, bridleway or other public land? ◉ Yes ○ No

If the planning authority needs to make an appointment to carry out a site visit, whom should they contact? (Please select only one)

○ The agent ◉ The applicant ○ Other person

26. Certificates (Certificate B)

Certificate of Ownership - Certificate B

Town and Country Planning (General Development Procedure) Order 1995 Certificate under Article 7

I certify/The applicant certifies that I have/the applicant has given the requisite notice to everyone else (as listed below) who, on the day 21 days before the date of this application, was the owner *(owner is a person with a freehold interest or leasehold interest with at least 7 years left to run)* of any part of the land or building to which this application relates.

Notice recipient	Date notice served
Name: David Fitness & Co. Limited Number: 3 Suffix: Street: The Parade, High Street Locality: Findon Town: Worthing Postcode: BN14 0SU	12/02/2009

Title: Mr First name: Darryl Surname: Shear

Person role: Agent Declaration date: 06/03/2009 ☒ Declaration made

26. Certificates (Agricultural Holdings Certificate)

Agricultural Holding Certificate

Town and Country Planning (General Development Procedure) Order 1995 Certificate under Article 7

Agricultural Land Declaration - You Must Select Either A or B

(A) None of the land to which the application relates is, or is part of an agricultural holding. ◉

(B) I have/The applicant has given the requisite notice to every person other than myself/the applicant who, on the day 21 days before the date of this application, was a tenant of an agricultural holding on all or part of the land to which this application relates, as listed below: ○

Title: Mr First Name: Darryl Surname: Shear

Person role: Agent Declaration date: 06/03/2009 ☒ Declaration Made

27. Declaration

I/we hereby apply for planning permission/consent as described in this form and the accompanying plans/drawings and additional information. ☒

Date 06/03/2009

Uniclass L41302:P7114	EPIC D1312:X725
CI/SfB (31.42)	Xn6

September 2004

Archaeology
- 4 MAR 2009

70mm DIAMOND SUITE WITH RIG EXTERNALLY GLAZED WINDOW FEATURED

Re-create the traditional look of timber windows, with Duraflex Diamond Featured Suite. As an integrated 70mm system, it not only looks good, due to the seamless sightlines, it is easy to install particularly in refurbishment projects. Security is not compromised, hardware can be specified according to the needs of each individual project. Complying with BS 7950 and BS 7413 this window is cost effective, secure and easy to install with a great deal of 'kerb side appeal'.

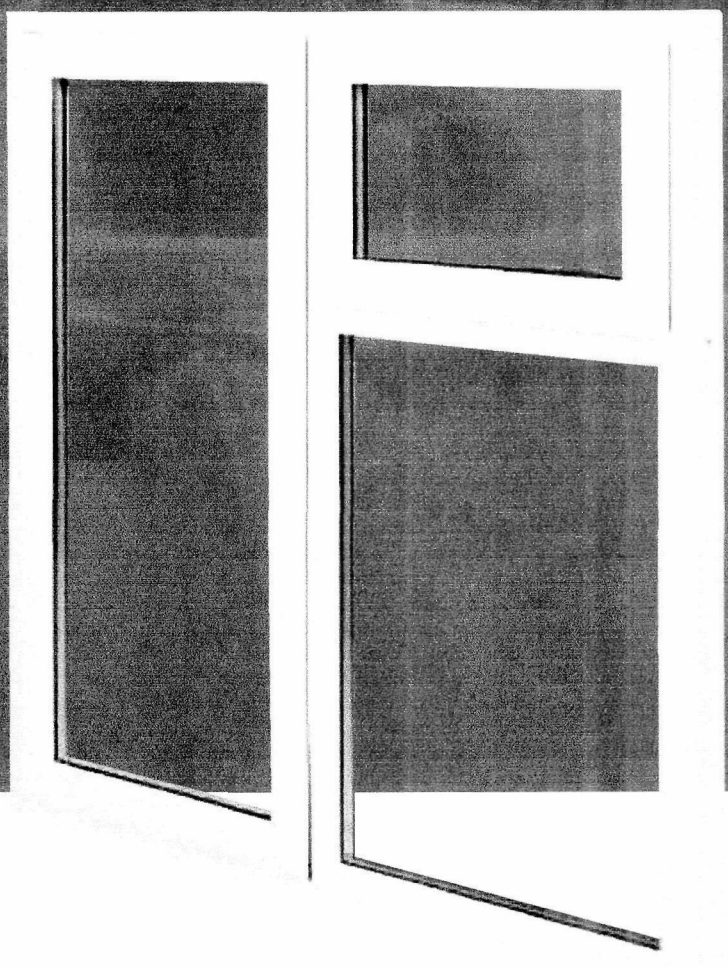

- Profile:
  70mm Diamond Suite Externally Glazed Window Featured [RIG]
- Colours:
  White, Mahogany, Golden Oak, Mahogany on White, Golden Oak on White

- Profiles used:
  7501 Intermediate Outerframe
  7502 Large Outerframe
  7532 'T' Transom/Mullion
  7533 'Z' Transom/Mullion
  6561 Externally beaded sash
  5850 Featured Bead



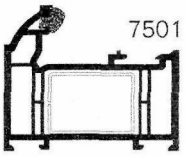

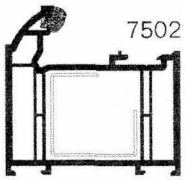

Featured outerframes

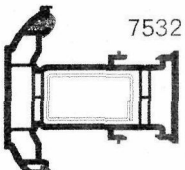

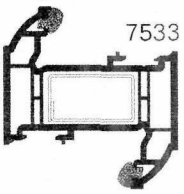

Featured 'T' and 'Z' transom/mullions



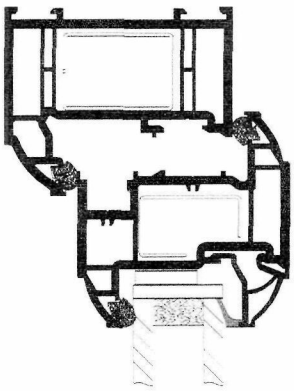

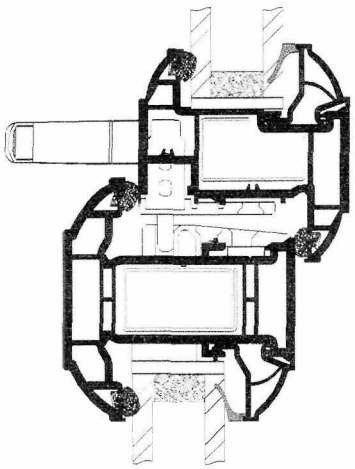

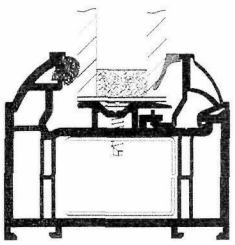

Featured externally glazed window general assembly

- Totally integrated 70mm system.
- Full depth Euro Groove that;
  - Is compatible with most types of hardware.
  - Makes adjustment and installation of hardware easier.
  - Is positioned to allow a large night vent facility.
  - Is situated at the reverse of the profile for enhanced security.
- Comprehensive system incorporates feature detail on all outerframes, transoms and sashes.
- Featured bead incorporates lowline gasket.
- Lowline gasket as standard.
- Complete compatibility with hinges, handles and hardware from the 65mm Diamond Suite.
- Full range of aluminum and steel reinforcement.
- Conforms to BS 7950 security standard.
- Complimented by a full range of ancillary products.
- Full range of co-ex bead styles capable of glazing 24mm and 28mm units.
- Common sightlines for both 70mm and 65mm systems.
- Internal and external glazing options available.
- Dedicated reinforcement sections available for maximum strength.
- Rolled-in Gasket [RIG].

DURAFLEX

THE NATURAL CHOICE IN PVCu

Severn Drive Tewkesbury Business Park Tewkesbury Gloucestershire GL20 8TX
Tel: 08705 351 351 www.duraflex.co.uk

DXLT0022

All information in this brochure is correct at the time of going to print. However, Duraflex reserve the right to change specifications for their profiles and accessory products in line with their policy of product development.

SHEAR DESIGN
ARCHITECTURAL DESIGNER



Front window to kitchen

Front Bay to Lounge

Side Window to Kitchen

Ax10090109

- 9 MAR 2009



Rear Window to Bedroom



Side Window to Bathroom

Mr. Hayman
Flat 5
Cliff Lodge
Old Salts Farm Road
Lancing
West Sussex
BN15 8JD

2 Saffron Close,
Shoreham-by -Sea,
West Sussex,
BN43 6JF

Direct line Tel : 01273 273827
Mobile No. : 07881 656512
e-mail : darrylshear@hotmail.com



Location Plan 1:1250

0 10 20 30 40 50m

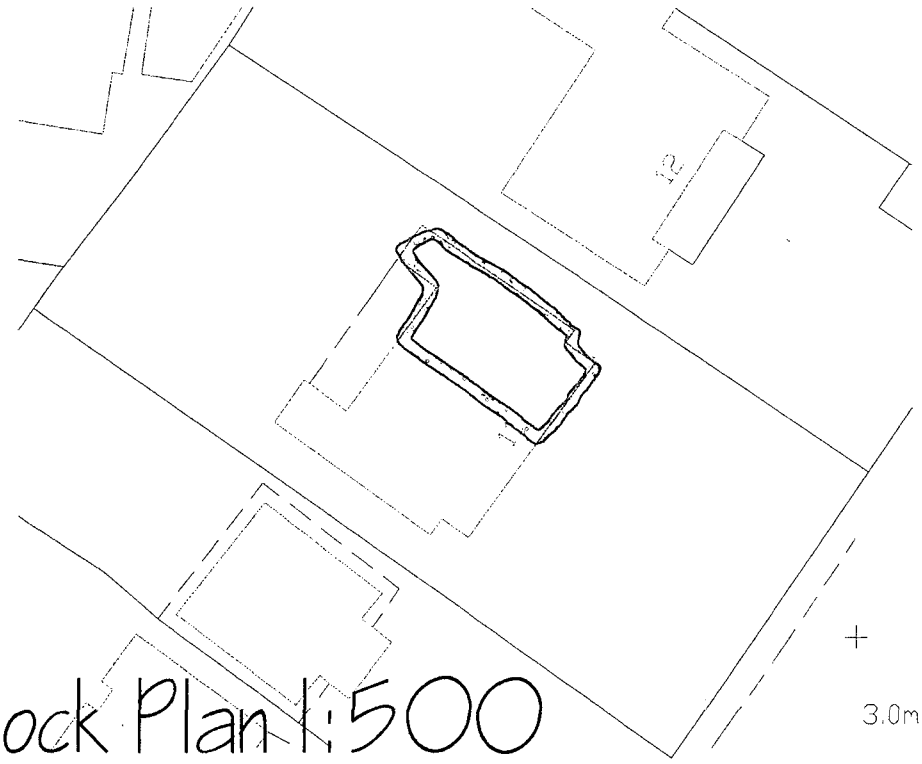

Block Plan 1:500

0 10 20 30 40 50m

General Notes		
No.	Revision/Issue	Date

Firm Name and Address

SHEAR DESIGN
ARCHITECTURAL DESIGNER

Project Name and Address

Mr Hayman
Flat 5
Cliff Lodge
Lancing
West Sussex
BN15 8JD

Project	Sheet
09/093	SY 1
Date: 07.02.09	
Scale: 1:1250 / 1:500	

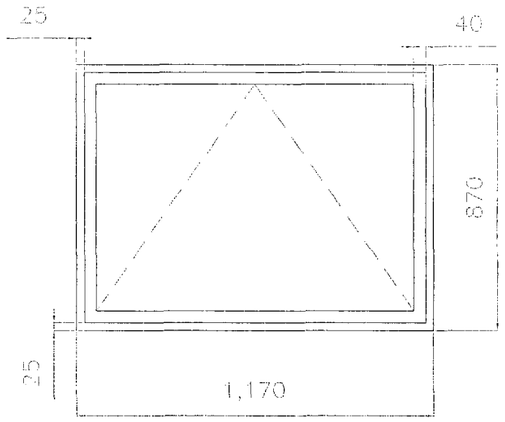

KITCHEN FRONT

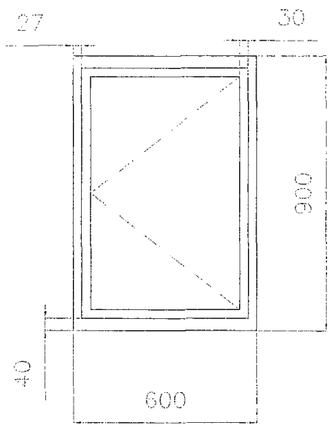

KITCHEN SIDE

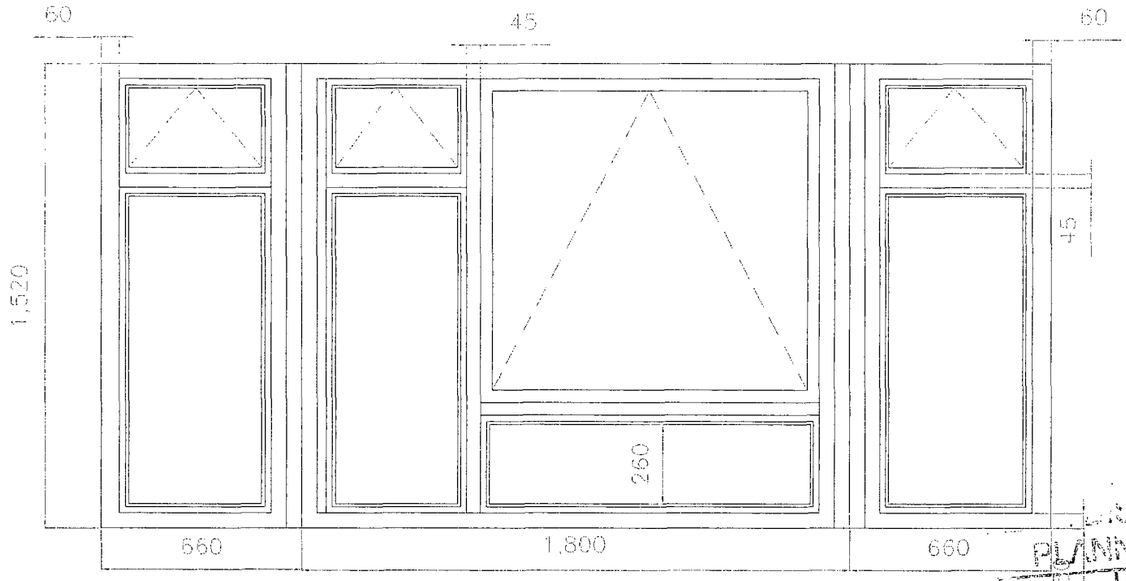

LOUNGE BAY WINDOW

COUNCIL
PLANNING DIVISION
PLAN No. Addendum
DATE 9 MAR 2009

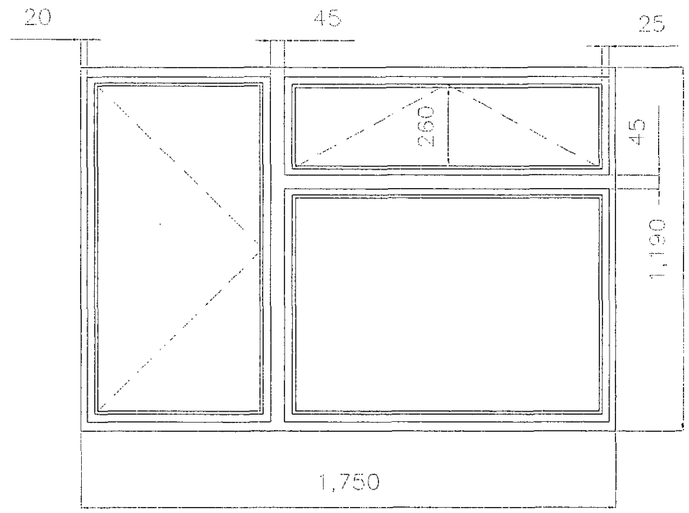

REAR BEDROOM

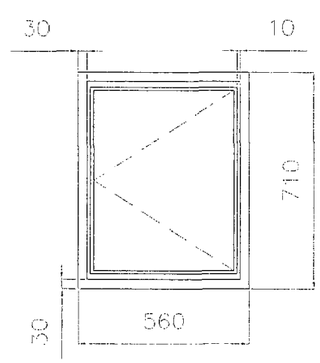

BATHROOM

General Notes		
No.	Revision/Issue	Date

Firm Name and Address

SHEAR DESIGN
ARCHITECTURAL DESIGNER

Project Name and Address

Mr Hayman
Flat 5
Cliff Lodge
Lancing
West Sussex
BN15 8JD

Project	Sheet
09/093	SK 1
Date: 07.02.09	
Scale: 1:20 :	

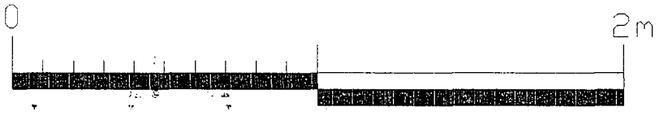

Existing windows 1:20

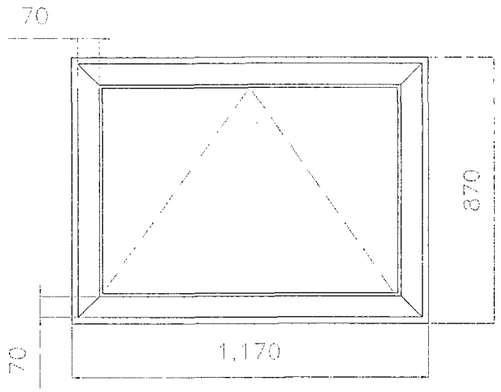

KITCHEN FRONT

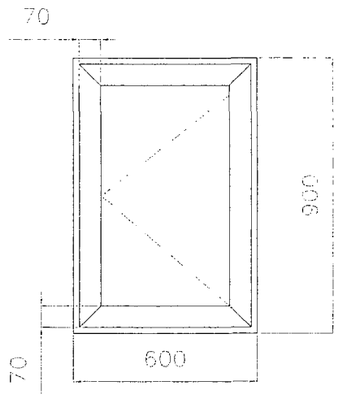

KITCHEN SIDE

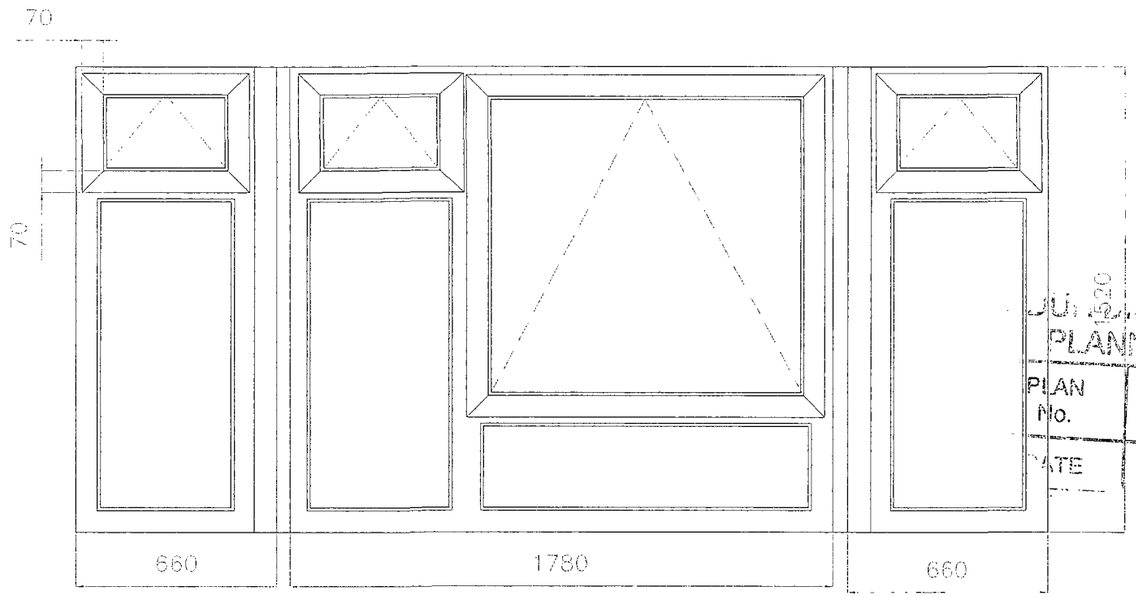

LOUNGE BAY WINDOW

COUNCIL
PLANNING DIVISION
PLAN No.
DATE
Application
- 9 MAR 2009

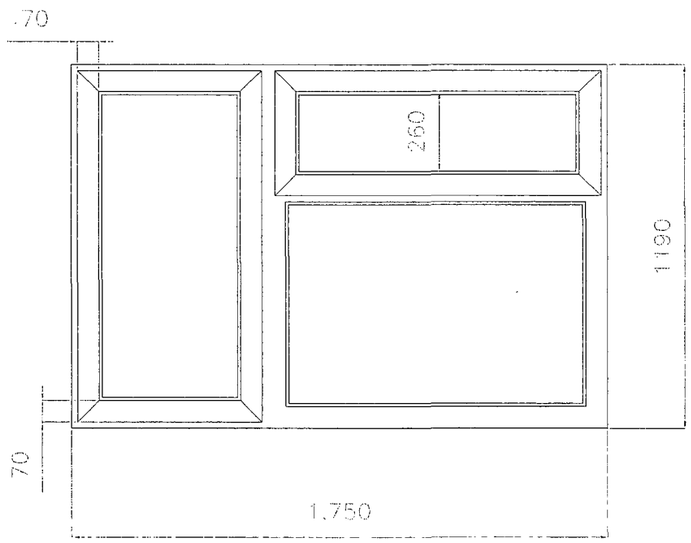

REAR BEDROOM

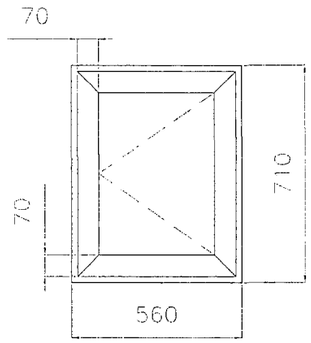

BATHROOM

Existing Timber Framed windows broken out and removed off site by contractor. Install new UPVC double glazed windows as indicated all in white finish, Contractor to be FENSA registered.

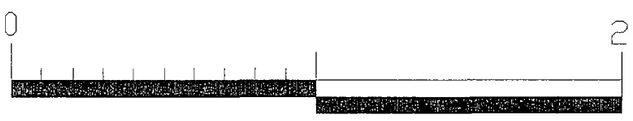

Proposed windows 1:20

General Notes

No.	Revision/Issue	Date

Firm Name and Address

SHEAR DESIGN
ARCHITECTURAL DESIGNER

Project Name and Address
Mr Hayman
Flat 5
Cliff Lodge
Lancing
West Sussex
BN15 8JD

Project	Sheet
09/093	SK 2
Date: 07.02.09	
Scale: 1:20	