Bottom frame

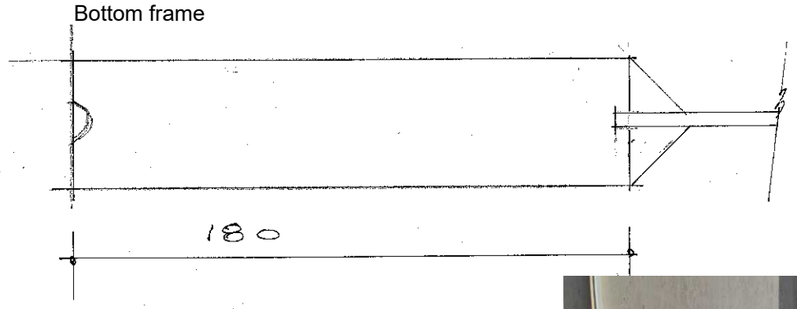

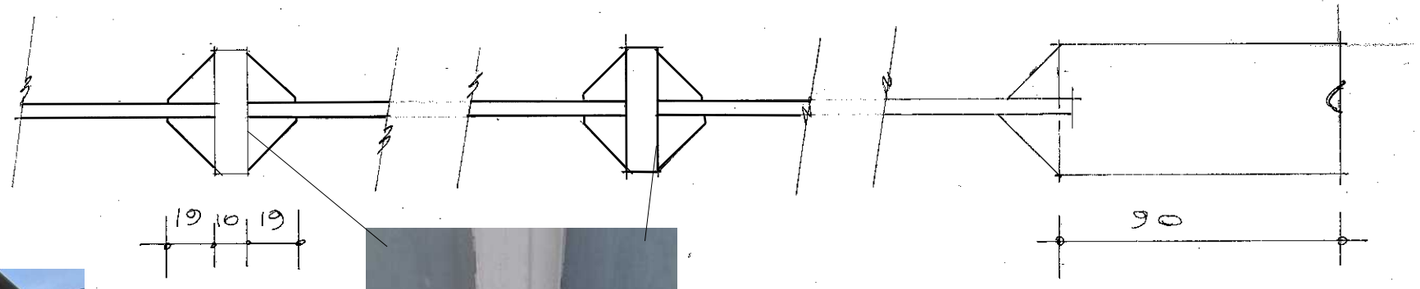

Top

Existing units - Timber framed





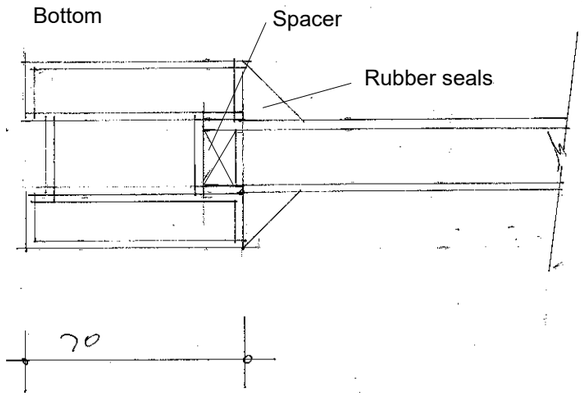

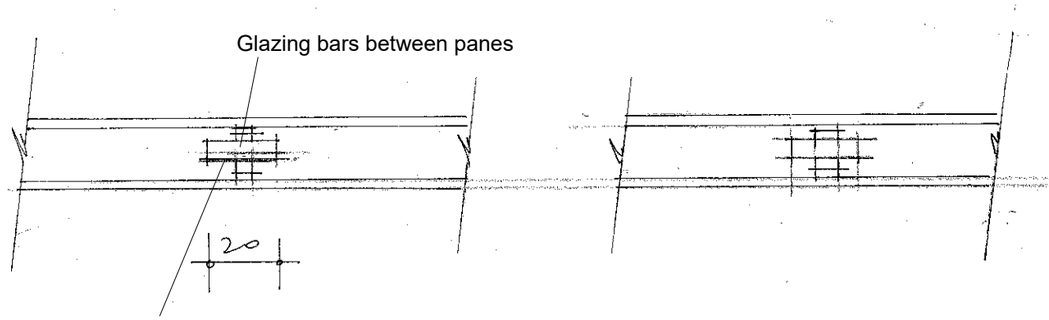

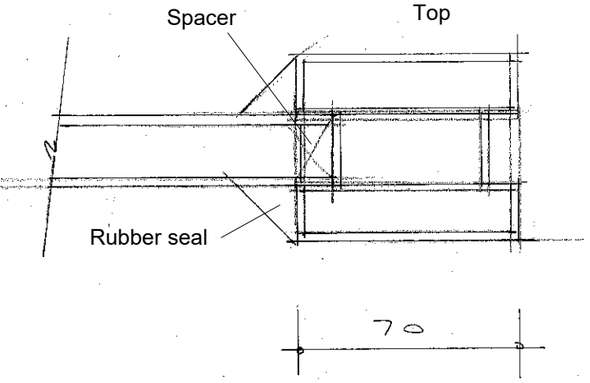

Proposed units - uPVC frames





AJ SALTER & SON
Architectural Technicians
and Surveyors
50 WINDSOR ROAD, WORTHING,
WEST SUSSEX, BN11 2LY
Tel/Fax: (01903 209496)
E-mail: ajsalterandson@hotmail.com

C			
B			
A			
Client	P. Wilson Esq		
Address	HARE & HOUNDS PH : 79-81 PORTLAND ROAD : WORTHING		
Drawing	DETAILS		No. 2324:2
Scale	1:2	Drawn IS	Date June 24