22 Maple Court
Proposed Window and Balcony Door (Outside perspective)

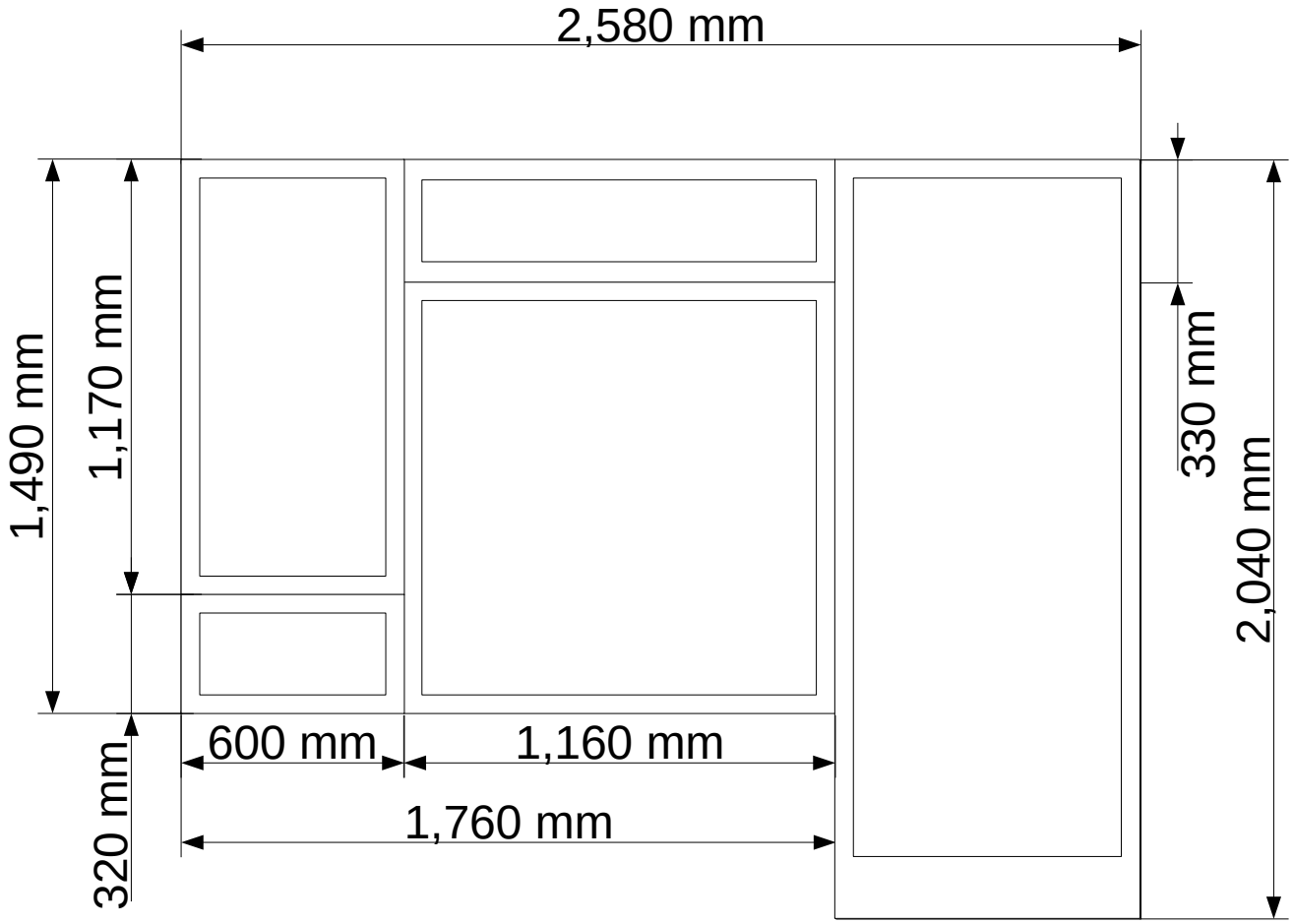

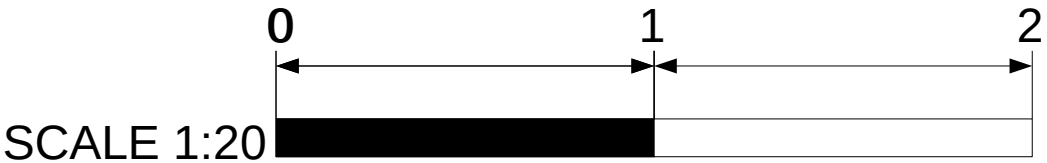

22 Maple Court
Proposed Bedroom Window (Outside perspective)

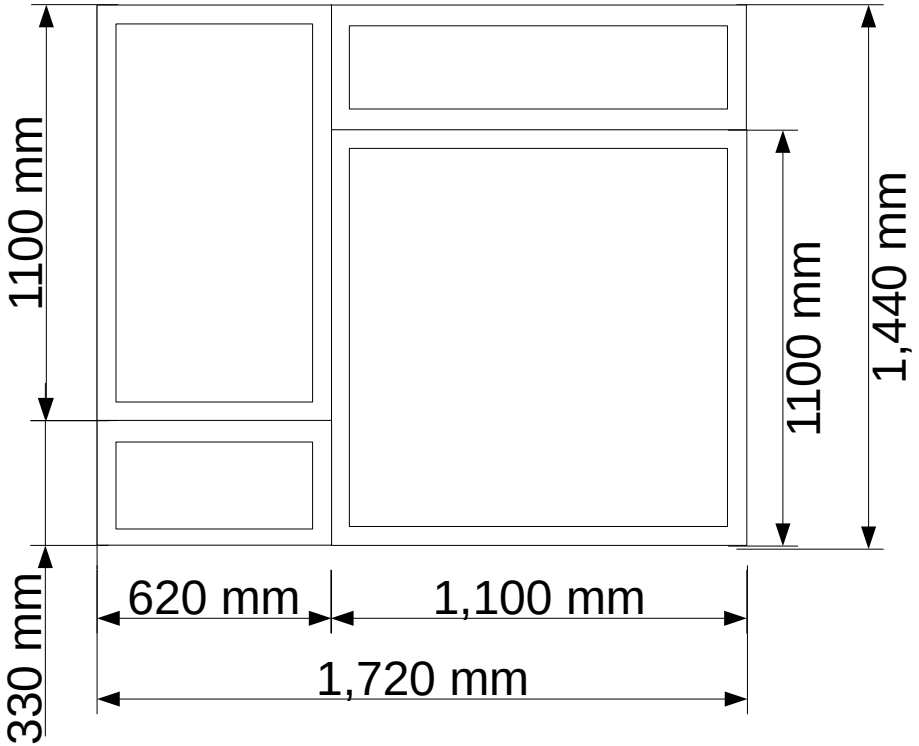

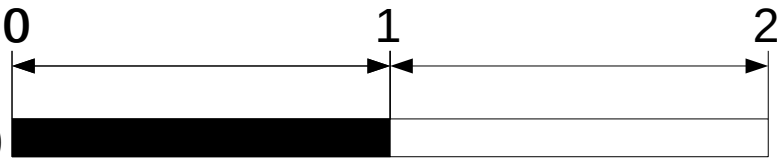

SCALE 1:20

22 Maple Court
Proposed Kitchen Window (Outside perspective)

