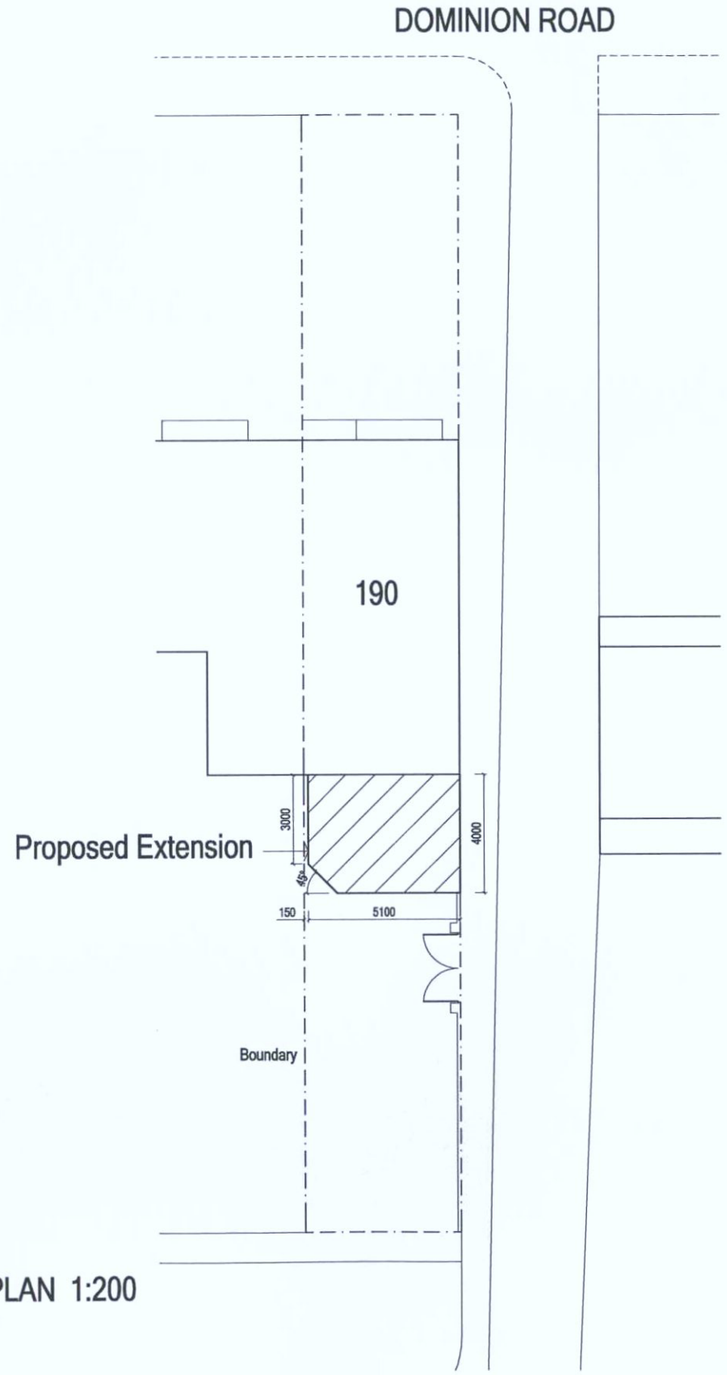

BLOCK PLAN 1:200

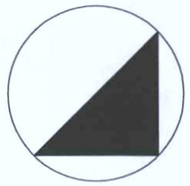

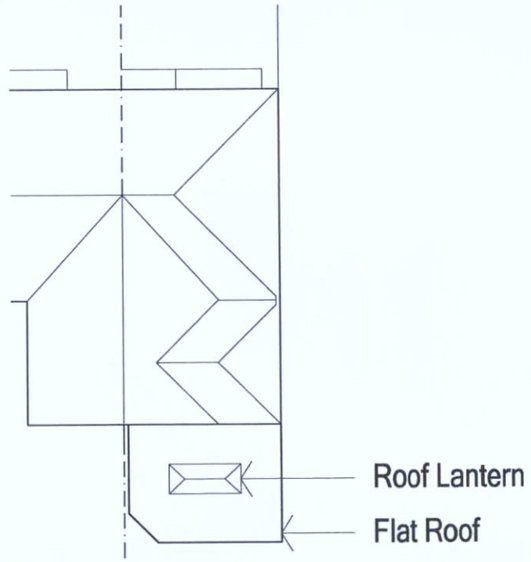

ROOF PLAN 1:200

0 1 2 3 4 5 10

Scale Bar 1:200

[redacted]

ARW Design	DRAWING TITLE: BLOCK PLAN & ROOF PLAN PROJECT: PROPOSED SINGLE STOREY REAR EXTENSION	LOCATION: 190, DOMINION ROAD, WORTHING CLIENT: N. KENNARD	SCALE: AS NOTED @ paper size A3 DATE: JAN 2018 DRAWN: ARW	DRAWING NO: 3259/3 REVISION: A

ARW Design 89, SOUTH STREET, TARRING, WORTHING, WEST SUSSEX, BN14 7ND. T: +44(0)1903234197 M: +44(0)7771851222 E: Arweeden1@aol.com
THIS DRAWING REMAINS THE COPYRIGHT OF ARW Design & SHALL NOT BE COPIED IN ANY FORMAT WITHOUT SPECIFIC APPROVAL IN WRITING