Third Angle Projection
ISO A1
Sheet Size

All Dimensions In Millimeters Unless Otherwise Stated.

A. It shall be the contractors responsibility to verify all dimensions, details, and job site conditions prior to proceeding with the work. Report any discrepancies to the main contractor in writing prior to proceeding with any work.

B. In all cases where conflict may occur, as between items on plans, drawings and specifications or notes and specific details, or for any omissions, Simple Simon Design shall be notified to interpret the intent of the documents and drawings prior to proceeding with any work.

C. If due to the nature or method of construction, details as shown on drawings or specified cannot be statisfactorily achieved, the fabricator shall immediately advise Simple Simon Design and recommend a modification that is considered necessary for the proper execution of the work; this request shall be made in writing before any material is ordered of fabricated. Any unsatisfactory work that develops during fabrication or installation shall be corrected at the fabricators expense.

D. Fabricator to provide shop drawings for approval prior to proceeding with production.

E. In no event should working dimensions be scaled from plans or details.

0 1 2 3 4 5 M

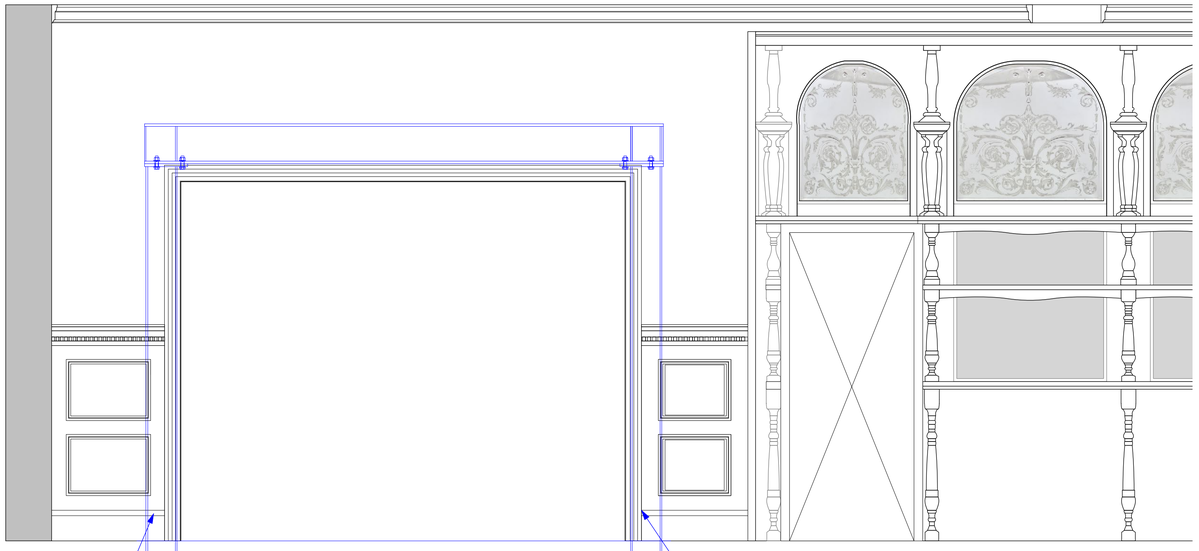

3 Elevation A
Scale: 1:20

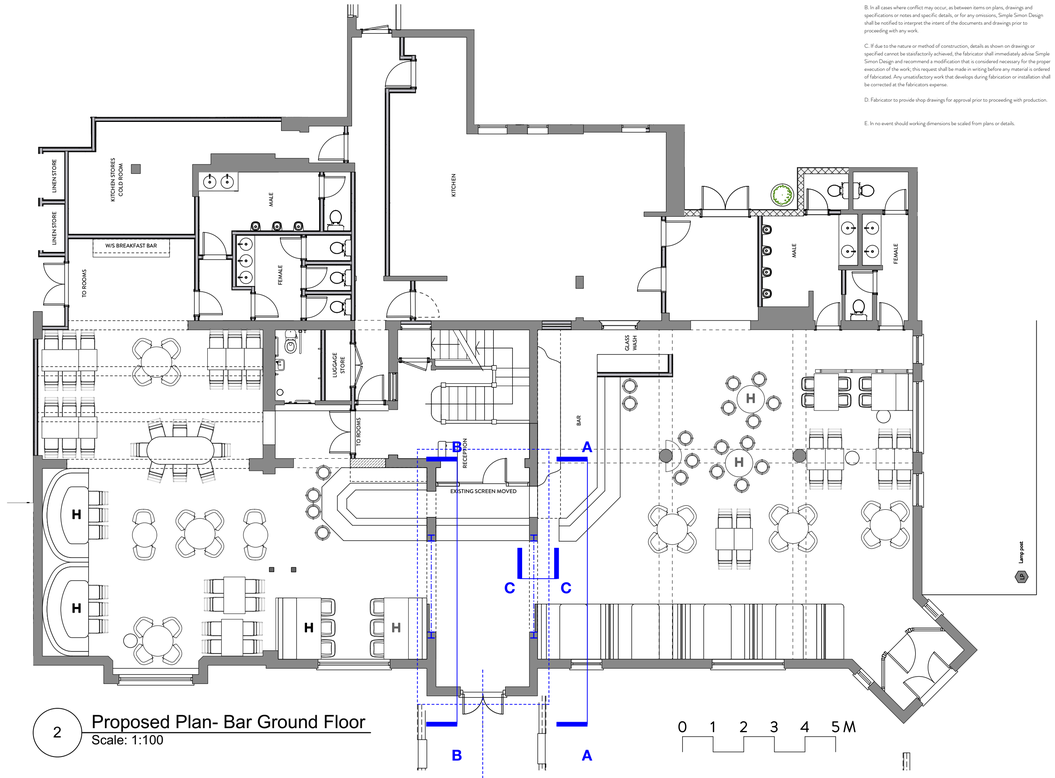

2 Proposed Plan- Bar Ground Floor
Scale: 1:100

0 1 2 3 4 5 M

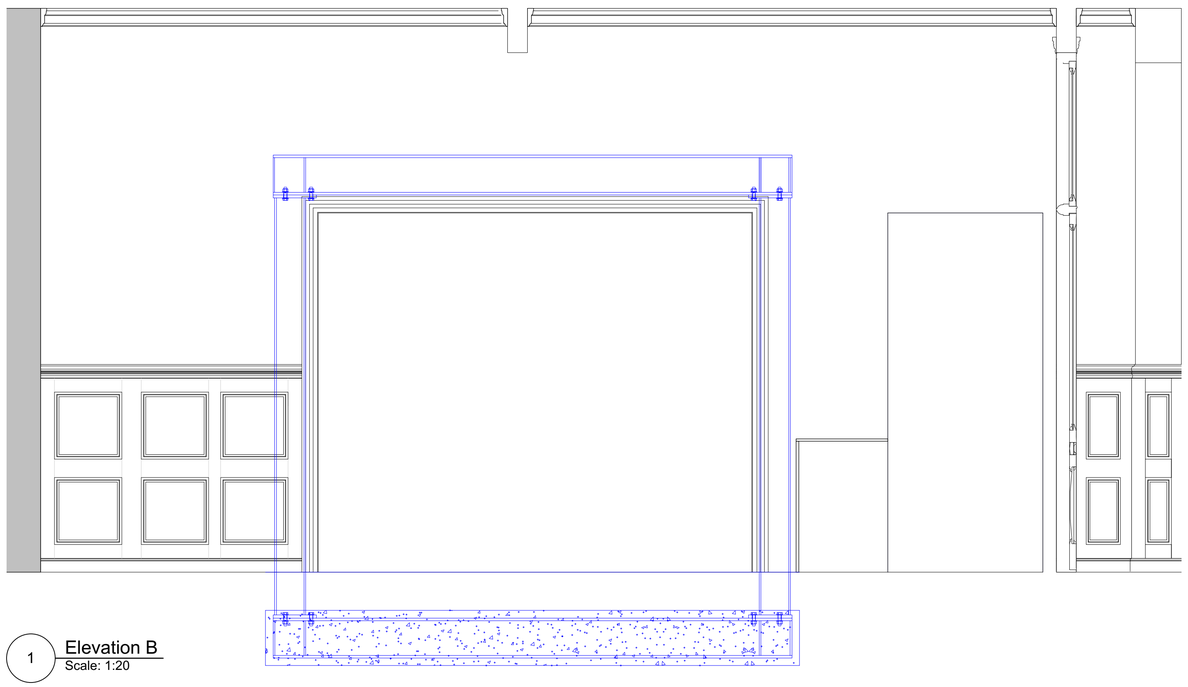

1 Elevation B
Scale: 1:20

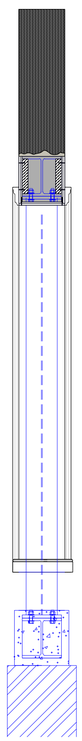

4 Section C
Scale: 1:20

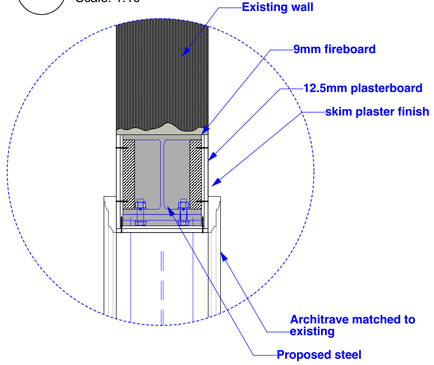

6 Detail - Section C
Scale: 1:10

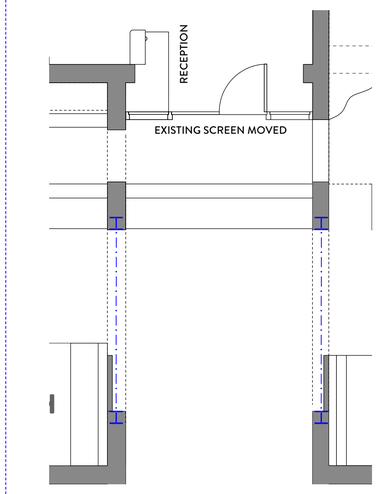

5 Proposed Plan- Bar Ground Floor
Scale: 1:50

0 1 2 3 4 5 M

A	04/04/2023	First Issue		RW

CLIENT Portobello Group
PROJECT The Grand Victorian
JOB NO 3009
Steel
TITLE
STATUS
DRAWN RW
SCALE See Drawing DATE 04/10/2022
DRAWING 3009-40-26 REV A

Simple Simon
creative spaces
510 PAINSWORKS
BATH ROAD
BRISTOL
BS4 3EH
+44(0)117 9729976
INFO@SIMPLESIMONDESIGN.CO.UK
WWW.SIMPLESIMONDESIGN.CO.UK

This drawing is protected by copyright. The design of any article recorded in this drawing is protected by design right and the information contained in this drawing is confidential. It may not be copied, reproduced or transmitted either in part or in whole by any means without permission.