

EAST ELEVATION AS EXISTING

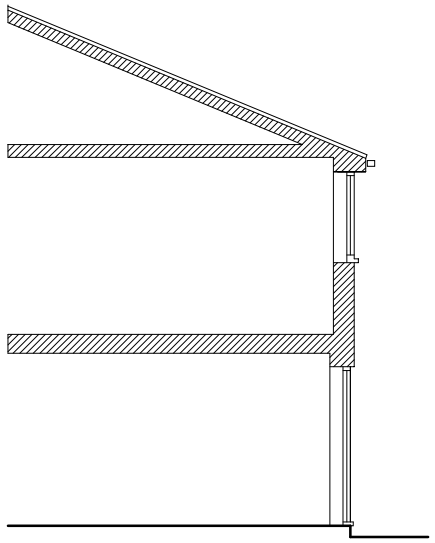

SECTION AS EXISTING



NORTH ELEVATION AS EXISTING

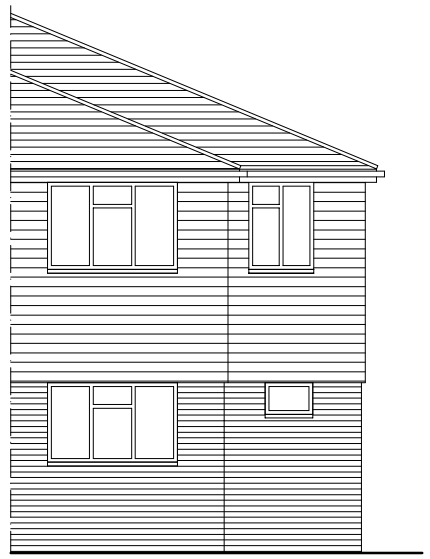

SOUTH ELEVATION AS EXISTING

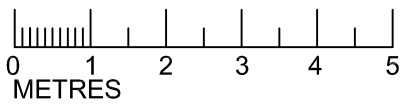

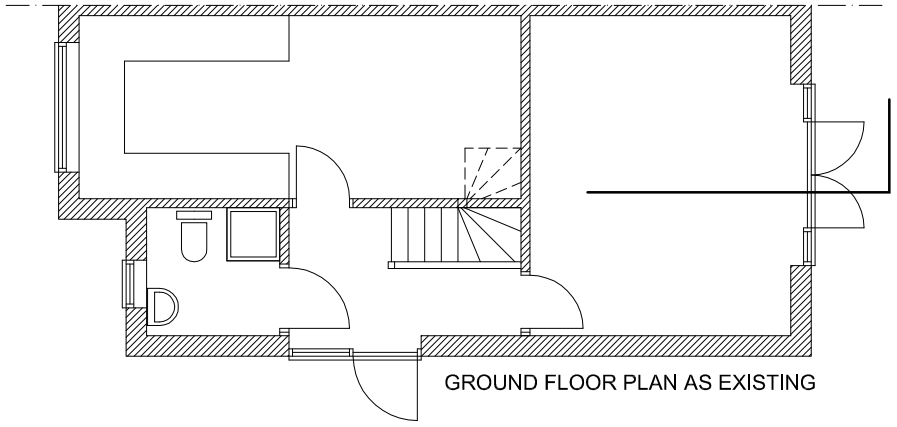

GROUND FLOOR PLAN AS EXISTING

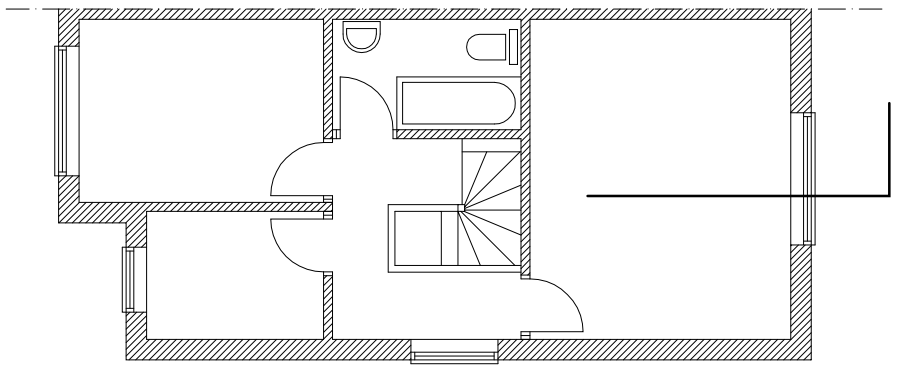

FIRST FLOOR PLAN AS EXISTING

PROPOSED EXTENSION TO
2B EAST MEADWAY,
SHOREHAM BEACH, BN43 5RF

PLANNING APPLICATION

SECTION PLANS AND ELEVATIONS AS EXISTING

RICHARD ROBINSON RIBA

RR ARCHITECTS
3 PACIFIC COURT, RIVERSIDE
SHOREHAM BY SEA
BN43 5AG
01273 452 634 07860 632 542
E-MAIL richard@rr-architects.co.uk

DRAWING NO. 20

SCALE 1:100 @A3

DRAWN BY RR 05-04-16

NORTH

